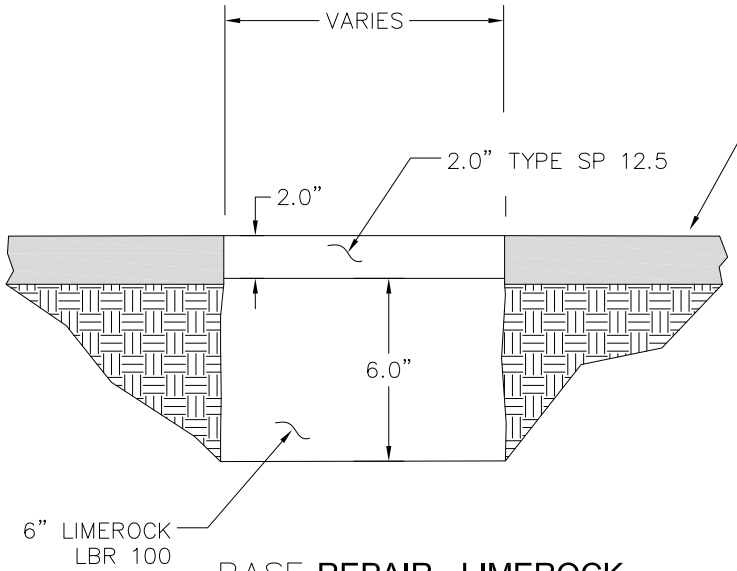

BASE REPAIR - LIMEROCK

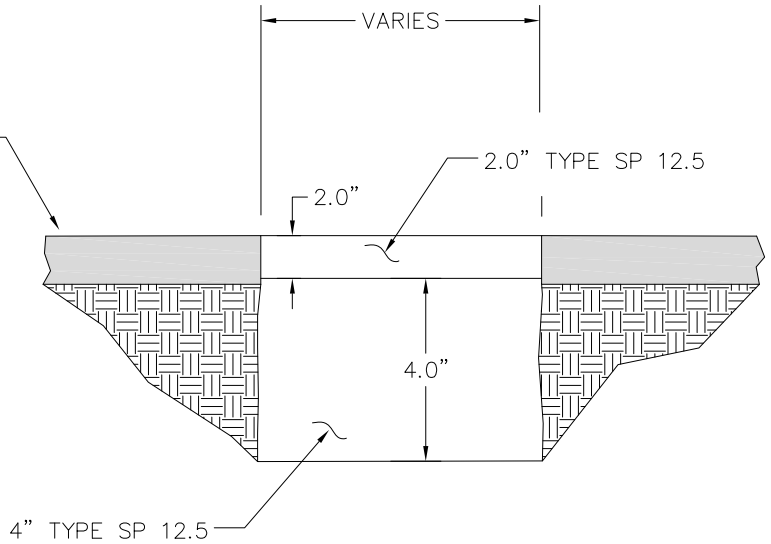

BASE REPAIR - ASPHALTIC

BASE REPAIR TYPICAL

ATTACHMENT 1