Full Moon Signs & Graphics

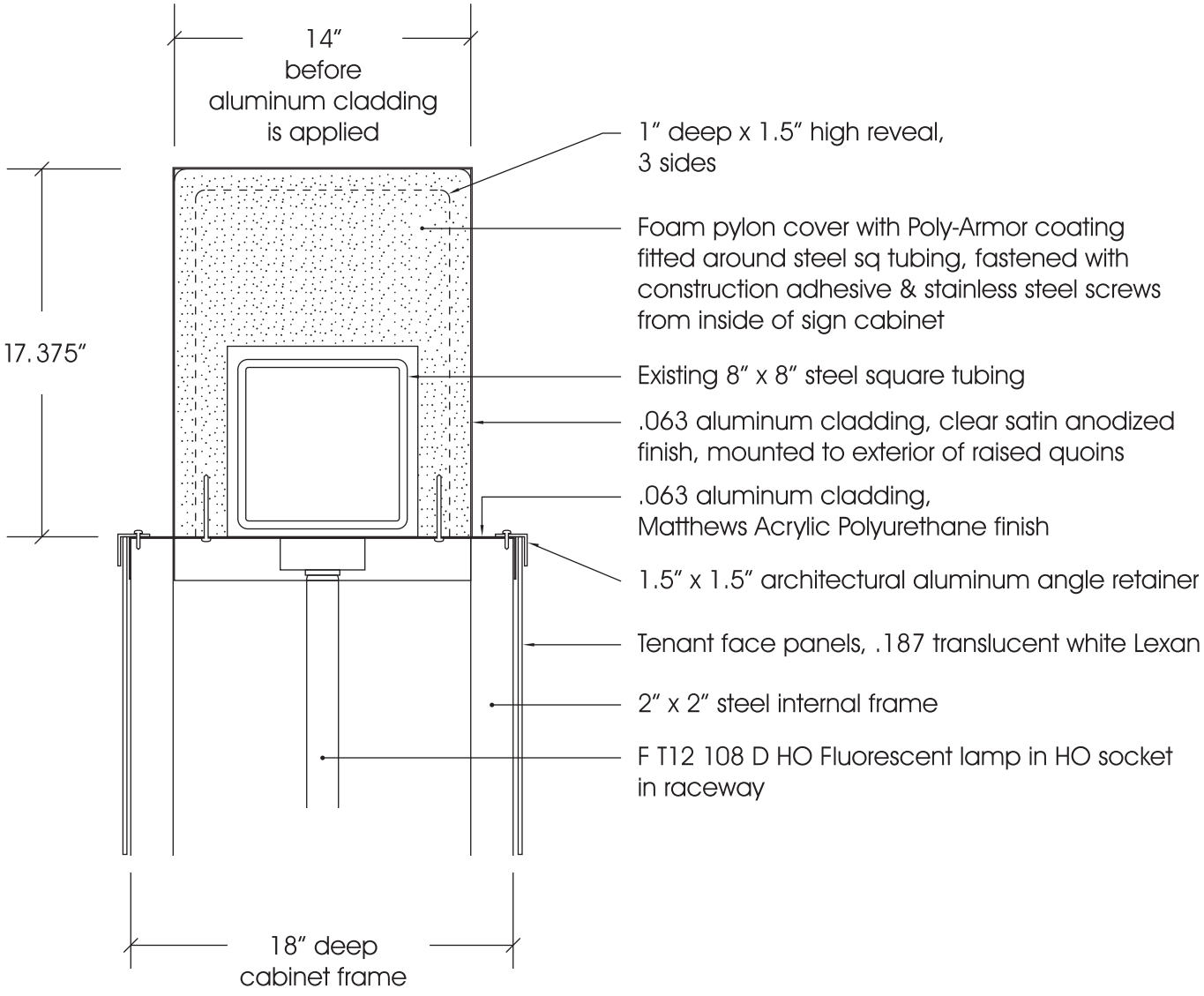

Primary ID - Free standing pylon sign
Partial section through tenant listing cabinet

1/8" = 1"

P. O. Box 5095
Tallahassee, FL
32314-5095
850-877-6683
FAX-877-6604

This design/concept is property of Full Moon Signs & Graphics and is protected by copyright.
It may not be used or reproduced in any way without written
consent from Full Moon Signs & Graphics.