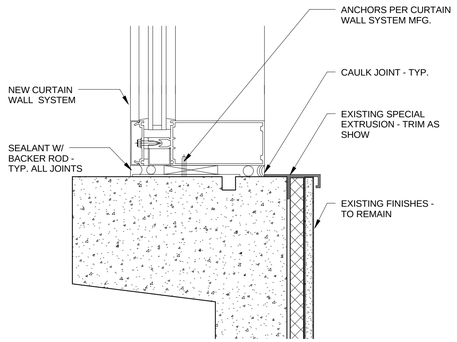

8 A2.2 New Jamb Section - Curtain Wall
3" = 1'-0"

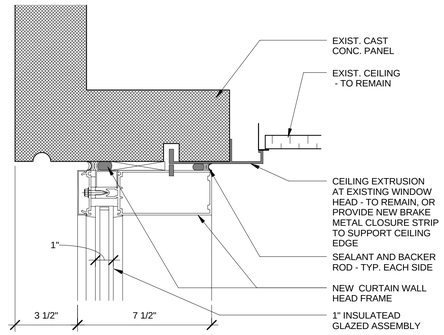

5 A2.2 New Head Section - Curtain Wall
3" = 1'-0"

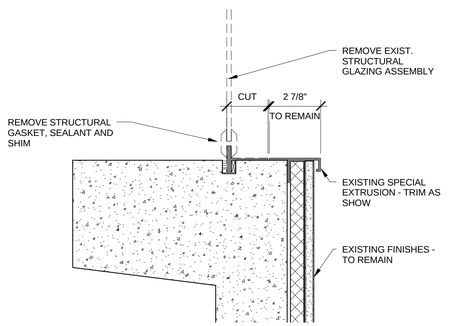

9 A2.2 Existing Jamb Section - Selective Demolition
3" = 1'-0"

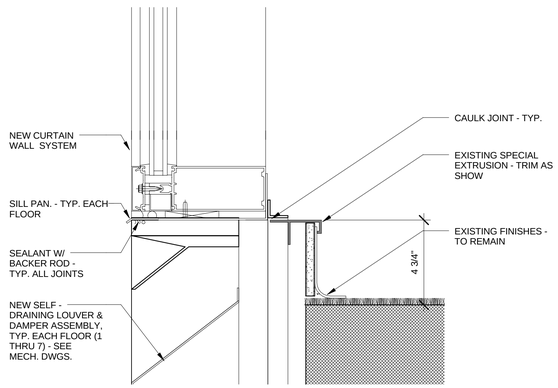

6 A2.2 New Sill Section - Curtain Wall
3" = 1'-0"

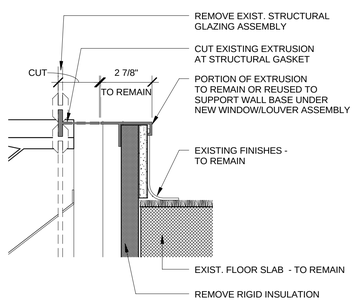

10 A2.2 Existing Sill Detail - Selective Demolition
3" = 1'-0"

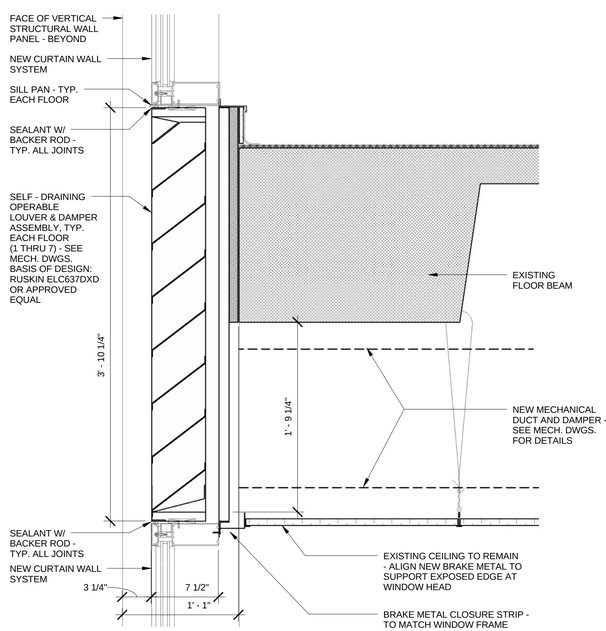

7 A2.2 Detail - Louver @ Spandrel Panel
1 1/2" = 1'-0"

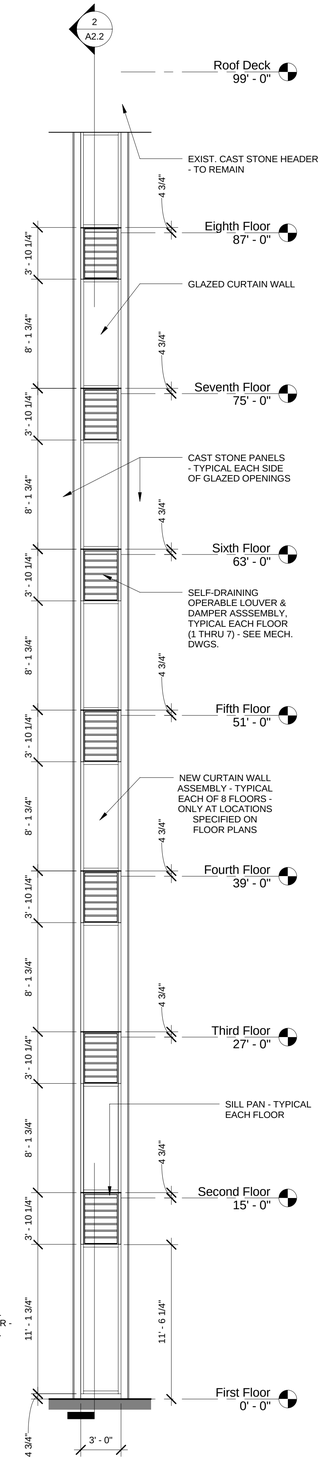

TYPICAL DETAIL FOR ONE VERTICAL BAY ON THE NORTH AND SOUTH ELEVATIONS WHERE SHOWN ON PLANS

4 A2.2 Typical Window Elevation
3/16" = 1'-0"

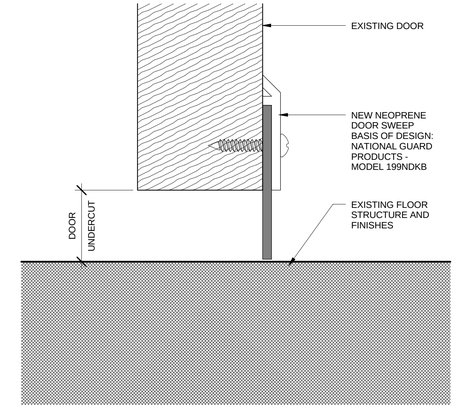

3 A2.2 Door Sweep - Typical All Stair Entry Doors
12" = 1'-0"

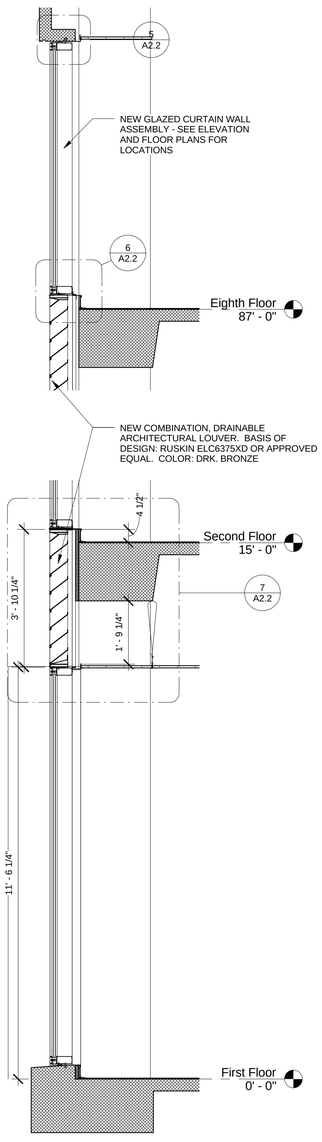

2 A2.2 Section - Window & Louver
1/2" = 1'-0"

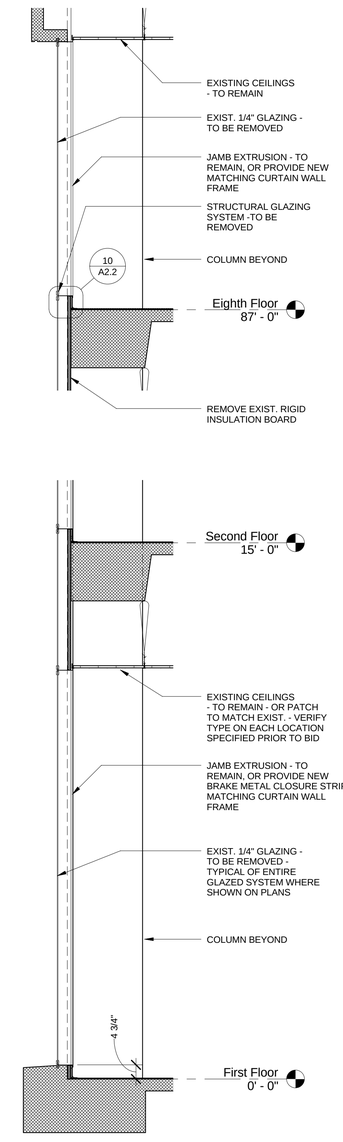

1 A2.2 Existing Section - Structural Gasket Glazing
1/2" = 1'-0"

Copyright Barnett Fronczak Barlowe, Architects. All rights Reserved

BARNETT FRONCZAK BARLOWE ARCHITECTS

Leon County Courthouse Annex (Bank of America) Stair & Elevator Pressurization

12062 — Project Code
Drawn By: Author
Checked By: Checker

27 April 2012
Date

Construction Documents

Revisions

Curtain Wall & Louver Details

Tallahassee Florida

A2.2

225 South Adams St, Tallahassee, FL 32301
Phone 850 224-6301 Fax 850 561-6978