POWER

	DUPLEX RECEPTACLE - 120 VOLT, 20 AMP, 3 POLE GROUNDING TYPE, MOUNT 18" AFF UNLESS NOTED OTHERWISE
	DUPLEX RECEPTACLE - 120 VOLT, 20 AMP, 3 POLE GROUNDING TYPE, MOUNT ABOVE COUNTERTOP
	DUPLEX RECEPTACLE - SPLIT WIRED - 120 VOLT, 20 AMP, 3 POLE GROUNDING TYPE, MOUNT 18" AFF UNLESS NOTED OTHERWISE. BOTTOM OUTLET IS UNSWITCHED-TOP OUTLET IS CONTROLLED WITH ROOM LIGHTING VIA OCCUPANCY SENSOR. PROVIDE MARKING SYMBOL PER NEC 406.3(E)
	SINGLE RECEPTACLE - 120 VOLT, 20 AMP, 3 POLE GROUNDING TYPE, MOUNT 18" AFF, UNLESS NOTED OTHERWISE
TV	DUPLEX RECEPTACLE SERVING TV - 120 VOLT, 20 AMP, 3 POLE GROUNDING TYPE, MOUNT 78" AFF (U.N.O.).
	QUADRAPLEX RECEPTACLE - 120 VOLT, 20 AMP, 3 POLE GROUNDING TYPE, MOUNT 18" AFF UNLESS NOTED OTHERWISE
J	JUNCTION BOX - 4" SQUARE UNLESS NOTED OTHERWISE
USB	DUPLEX RECEPTACLE - 120 VOLT, 20 AMP, 3 POLE GROUNDING TYPE, WITH 2-USB TYPE A CHARGING PORTS, 3.1A CAPACITY. PROVIDE DECORATIVE FACEPLATE TO MATCH OTHER DEVICES IN ROOM. MOUNT 42" AFF UNLESS NOTED OTHERWISE. WIRE DEVICE SWITCHED WITH PLUG LOAD CONTROL.
E	ELECTRICAL CONNECTION TO EQUIPMENT
J F	MODULAR FURNITURE POWER BOX - 4" SQUARE OUTLET BOX WITH 1-GANG PLASTER RING. MOUNT AT 18" AFF. PROVIDE WHIP TO FURNITURE BY MODULAR FURNITURE.
J	JUNCTION BOX - 4" SQUARE UNLESS NOTED OTHERWISE
	WIRE IN CONDUIT - CONCEALED IN WALL OR CEILING
	LOW VOLTAGE WIRING - CONCEALED IN WALL OR CEILING
	HOMERUN TO PANEL - SLASH MARKS INDICATE NUMBER OF PHASE CONDUCTORS, NO SLASH MARKS INDICATE 2 CURRENT CARRYING CONDUCTORS, LONG SLASH MARK(S) INDICATE NEUTRAL CONDUCTOR(S). (NOTE THAT THE GREEN GROUND WIRE IS NOT SHOWN BUT IS REQUIRED IN EACH FEEDER, LIGHTING, RECEPTACLE, AND POWER BRANCH CIRCUIT.) THERE SHALL BE NO SHARED NEUTRALS BETWEEN MULTIPLE CIRCUITS.
	ELECTRIC PANEL - 120/208 VOLT
	ELECTRIC PANEL - 277/480 VOLT
	TELE/POWER POLE - EXISTING
	DISCONNECT SWITCH - SEE DRAWING FOR SIZE *
PL	ON / OFF PLUG LOAD CONTROLLER (WATTSTOPPER #LMPL-101 OR EQUAL)
REL	RELOCATE EXISTING DEVICE TO POSITION SHOWN
S J TV	EXAMPLES OF ELECTRICAL ITEMS TO BE REMOVED

* EQUIPMENT SIZES WILL BE INDICATED AS FOLLOWS:

STARTER NEMA SIZE (NO NUMBER SHOWN FOR DISC SWITCHES) — 1 $\frac{30/3}{25AF}$ 3R
- AMP RATING & POLE QTY.
- NEMA ENCLOSURE TYPE
- FUSE AMPS ABSENCE OF "F" DENOTES NON-FUSED)

FIRE ALARM SYSTEM

NOTE: FIRE ALARM SYSTEM CONTRACTOR SHALL SUBMIT A SEPARATE PERMIT APPLICATION AND PLANS FOR REVIEW.

FATC	FIRE ALARM TERMINAL CABINET
AIM	ADDRESSABLE INTERFACE MODULE - CONNECT TO FIRE ALARM SYSTEM
F #	FIRE ALARM SPEAKER/STROBE - MOUNT 80" AFF TO BOTTOM OF STROBE UNLESS NOTED OTHERWISE. VISIBLE APPLIANCES WITHIN SAME ROOM OR WITHIN FIELD OF VIEW SHALL FLASH IN SYNCHRONIZATION PER NFPA 72. ("#" INDICATES CANDELA RATING. 95 CD IF OMITTED OR NOTED OTHERWISE).
F #	ADA COMPLIANT FLASHING STROBE - MOUNT 80" AFF TO BOTTOM OF STROBE UNLESS NOTED OTHERWISE. VISIBLE APPLIANCES WITHIN SAME ROOM OR WITHIN FIELD OF VIEW SHALL FLASH IN SYNCHRONIZATION PER NFPA 72. ("#" INDICATES CANDELA RATING. 95 CD IF OMITTED OR NOTED OTHERWISE).
F #	ADA COMPLIANT FLASHING STROBE - CEILING MOUNT UNLESS NOTED OTHERWISE. VISIBLE APPLIANCES WITHIN SAME ROOM OR WITHIN FIELD OF VIEW SHALL FLASH IN SYNCHRONIZATION PER NFPA 72. ("#" INDICATES CANDELA RATING. 95 CD IF OMITTED OR NOTED OTHERWISE).
F #	ADA COMPLIANT SPEAKER STROBE - CEILING MOUNT UNLESS NOTED OTHERWISE. VISIBLE APPLIANCES WITHIN SAME ROOM OR WITHIN FIELD OF VIEW SHALL FLASH IN SYNCHRONIZATION PER NFPA 72. ("#" INDICATES CANDELA RATING. 95 CD IF OMITTED OR NOTED OTHERWISE).
S	SYSTEM SMOKE DETECTOR - CEILING MOUNTED - CONNECT TO FIRE ALARM SYSTEM

LIGHTING AND LIGHTING CONTROLS

A##	LED OR FLUORESCENT LIGHT FIXTURE - CAPITAL LETTER INDICATES FIXTURE TYPE
EM	LED OR FLUORESCENT FIXTURE ON EMERGENCY GENERATOR CIRCUIT
	LED OR FLUORESCENT STRIP FIXTURE
	LED, INCANDESCENT, HID, OR COMPACT FLUORESCENT FIXTURE
	LED, INCANDESCENT, HID, OR COMPACT FLUORESCENT FIXTURE ON EMERGENCY GENERATOR CIRCUIT
	PENDANT FIXTURE
	EXIT LIGHT FIXTURE - PROVIDE ARROWS WHERE SHOWN. SHADING INDICATES FACE(S) OF EXIT LIGHT (POWERED EXIT SIGNS SHALL BE WIRED "UNSWITCHED")
	EMERGENCY LIGHTING UNIT/EXIT SIGN
	DENOTES WALL MOUNTED DEVICE
R	EMERGENCY LIGHTING RELAY - LOCATED ABOVE LIFT-OUT CEILING. SEE DETAIL A/E301. (MOUNT 12" BELOW CEILING WHERE THERE IS NO LIFT-OUT CEILING).
S	SINGLE-POLE TOGGLE SWITCH - 120/277 VOLT, 20 AMP, MOUNT 48" AFF
S_3	THREE-WAY SWITCH - 120/277 VOLT, 20 AMP, MOUNT 48" AFF
S	EXISTING SWITCH TO BE REMOVED
M	EXISTING OCCUPANCY SENSOR TO BE REMOVED
V	VACCANCY SENSOR - LINE VOLTAGE, WALL MOUNTED, DUAL TECHNOLOGY, SINGLE RELAY - MOUNT 48" AFF (B.O.D. - WATTSTOPPER; DSW-100)
M	OCCUPANCY SENSOR - LOW VOLTAGE, CEILING MOUNTED, DUAL TECHNOLOGY (B.O.D. - WATTSTOPPER; DT-305)
RC	DIGITAL ON/OFF ROOM CONTROLLER (WATTSTOPPER LMRC-102 OR EQUAL).
$B_{\#}$	DIGITAL ON/OFF WALL SWITCH, MOUNT 48" AFF (WATTSTOPPER LMRC-10# OR EQUAL).

SYSTEMS

DB	DOORBELL - EXISITNG
CR	SECURITY SYSTEM - CARD READER
	PUSH-BUTTON FOR HC DOOR OPENER
RX	REQUEST TO EXIT DEVICE
	DOOR RELEASE PUSH BUTTON - MOUNT UNDER DESK. PROVIDE 1/2" CONDUIT FROM BUTTON TO DOOR LOCK.
S	INTERCOM CEILING MOUNTED FLUSH SPEAKER.

TELECOMMUNICATIONS

CBB	COMMUNICATIONS BACKBOARD - EXISTING
C	COMMUNICATIONS TERMINAL OUTLET - 4" SQUARE OUTLET BOX, 2 1/8" DEEP WITH 1-GANG PLASTER RING. MOUNT AT 18" AFF. ROUTE 1" CONDUIT UP WALL TO ABOVE CEILING, TURN INTO CEILING SPACE AND PROVIDE BUSHING.
C F	COMMUNICATIONS TERMINAL OUTLET FOR MODULAR FURNITURE - 4" SQUARE OUTLET BOX, 2 1/8" DEEP WITH 1-GANG PLASTER RING. MOUNT AT 18" AFF. ROUTE 2" CONDUIT UP WALL TO ABOVE CEILING, TURN INTO CEILING SPACE AND PROVIDE BUSHING.

TELEVISION

TV	TELEVISION OUTLET - EXISTING

LIGHTING FIXTURE SCHEDULE

CONTRACTOR SHALL COORDINATE FIXTURE TYPE WITH ARCHITECTURAL FINISH SCHEDULE(S)
VOLTAGE 277 V UNLESS NOTED OTHERWISE

TYPE	MANUFACTURER	CATALOG NUMBER	LAMPS (1) NO.	LAMPS (1) TYPE	REMARKS (2)
A	PHILIPS EQUAL EQUAL	P2FXP38B840-2-DS-UNV-DIM EQUAL EQUAL	INC.	LED	2X2 LED FLAT PANEL WITH 0-10V DIMMING 39 WATTS AND 3800 LUMENS
B	INTENSE EQUAL EQUAL	SS6G4DRL3358/IC630W EQUAL EQUAL	INC.	LED	6" RECESSED DOWNLIGHT 17.2 WATTS AND 1800 LUMENS
D	V2 EQUAL EQUAL	NLRP-JRD-V-0780-40-R4-A5-BK EQUAL EQUAL	INC.	LED	5" DIAMETER ROUND PENDANT. 39 DEGREE REFLECTOR. DARK BRONZE FINISH AND BLACK CORD. 6 WATTS AND 750 LUMENS.
E	BEGHELLI EQUAL EQUAL	VA4-R-SA EQUAL EQUAL	INC.	LED	EMERGENCY EXIT SIGN WHITE THERMOPLASTIC HOUSING WITH RED LED'S 3.2WATTS
F	V2 EQUAL EQUAL	BL2P-5'-1-R-V-40-D-A5 EQUAL EQUAL	INC.	LED	5' LINNEAR LED PENDANT. DARK BRONZE FINISH. 5 WATTS AND 460 LUMENS PER FOOT.

LIGHT FIXTURES DEEMED EQUAL TO THOSE SPECIFIED SHALL BE SUBMITTED FOR APPROVAL IN ACCORDANCE WITH SPECIFICATION SECTION 265119.
(1) ALL LIGHTS SHALL BE 4000K UNLESS NOTED OTHERWISE.

ELECTRICAL GENERAL NOTES

1. INSTALL ALL WORK IN ACCORDANCE WITH THE FLORIDA BUILDING CODE 2017 EDITION, THE FLORIDA FIRE PREVENTION CODE 2017 EDITION, THE NATIONAL ELECTRICAL CODE 2014 EDITION, AND ALL CODES, ORDINANCES, RULES AND REGULATIONS OF AUTHORITIES HAVING JURISDICTION AT THIS SITE. WHERE CONFLICTS OCCUR BETWEEN CODES AND THE CONSTRUCTION DOCUMENTS, THE MOST RESTRICTIVE REQUIREMENTS SHALL GOVERN.
2. CONTRACTOR SHALL GUARANTEE THE WORK AND MATERIALS FOR A PERIOD OF ONE YEAR FROM DATE OF FINAL ACCEPTANCE. THIS GUARANTEE SHALL BE IN ADDITION TO THE WARRANTIES PROVIDED BY MATERIAL SUPPLIERS AND MANUFACTURERS.
3. ENTRY AND REMOVAL OF EQUIPMENT FROM THE BUILDING SHALL BE THE RESPONSIBILITY OF THE CONTRACTOR. CONTRACTOR SHALL REPLACE OR REPAIR ANY DAMAGED MATERIALS TO THEIR ORIGINAL CONDITION. SURFACES SHALL BE REPAIRED TO MATCH THE EXISTING ADJACENT UNDAMAGED SURFACES.
4. ALL WIRING SYSTEMS SHALL BE COPPER CONDUCTORS IN METALLIC CONDUIT, UNLESS NOTED OTHERWISE. WIRE AND CONDUIT SIZES SHOWN ARE BASED ON THHN COPPER, UNLESS NOTED OTHERWISE. FLEXIBLE METAL CONDUIT SHALL BE STEEL AND USED TO CONNECT EQUIPMENT WHERE INDICATED AND WHERE REQUIRED DUE TO VIBRATION AND CONNECTION ACCESSIBILITY.
5. ALL CONDUIT SHALL BE STRAPPED IN ACCORDANCE WITH REQUIREMENTS OF N.E.C.
6. BOND AND GROUND ALL SYSTEMS AND EQUIPMENT PER ARTICLE 250 OF N.E.C. PROVIDE A GROUNDING CONDUCTOR SIZED IN ACCORDANCE WITH ARTICLE 250-122 N.E.C. ON ALL RECEPTACLES AND POWER BRANCH CIRCUITS.
7. LIGHTING FIXTURES SHALL BE SECURELY FASTENED AND SUPPORTED PER N.E.C.
8. THE CONTRACTOR SHALL COORDINATE THE CIRCUIT REQUIREMENTS WITH THE MANUFACTURER OF THE ACTUAL EQUIPMENT FURNISHED UNDER OTHER DIVISIONS OF WORK. THE CIRCUIT BREAKER, WIRE AND CONDUIT SHALL BE SIZED AS RECOMMENDED BY THE EQUIPMENT MANUFACTURER.
9. ALL CIRCUIT BREAKERS SHALL BE BOLT-IN TYPE.
10. PROVIDE A LAMINATED PLASTIC NAMEPLATE IDENTIFYING EACH NEW PANELBOARD, MOTOR STARTER AND DISCONNECT SWITCH. LETTERING SHALL BE ½" MINIMUM AND SHALL IDENTIFY EQUIPMENT SERVED, FEEDER ORIGINATION AND CIRCUIT NUMBER. SECURE NAMEPLATE TO EQUIPMENT WITH SCREWS. TAPE OR WIRE IS NOT AN APPROVED METHOD OF SECURING NAMEPLATE.
11. ALL MISCELLANEOUS EQUIPMENT FURNISHED UNDER OTHER SECTIONS OF THE SPECIFICATIONS THAT REQUIRE ELECTRICAL CONNECTIONS SHALL BE RECEIVED AND SET WITH ROUGH-IN AND FINAL CONNECTIONS MADE UNDER THESE SECTIONS.
12. ALL DEVICE MOUNTING HEIGHTS INDICATED SHALL BE TO OUTLET BOX CENTER LINE.
13. WHERE THE PREMISE WIRING SYSTEM HAS FEEDERS AND/OR BRANCH CIRCUITS SUPPLIED FROM MORE THAN ONE NOMINAL VOLTAGE SYSTEM, EACH FEEDER, UNGROUNDED CONDUCTOR, AND GROUNDED CONDUCTOR SHALL BE IDENTIFIED BY PHASE OR LINE AND SYSTEM AT ALL TERMINATION, CONNECTION, AND SPLICE POINTS. IDENTIFICATION MEANS SHALL BE PERMANENTLY POSTED AT EACH PANEL-BOARD OR SIMILAR DISTRIBUTION EQUIPMENT WITH LABEL. LABEL SHALL BE 1/8-INCH THICK PLASTIC WITH BLACK BACKGROUND AND 1/4-INCH HIGH WHITE LETTERS ATTACHED WITH CONTACT TYPE PERMANENT ADHESIVE. SEE FIGURE BELOW FOR TYPICAL LABEL DESIGN.

VOLTAGE 208Y/120V		VOLTAGE 480Y/277V	
PHASE A	BLACK	PHASE A	BROWN
PHASE B	RED	PHASE B	ORANGE
PHASE C	BLUE	PHASE C	YELLOW
NEUTRAL	WHITE	NEUTRAL	GRAY

ELECTRICAL DEMOLITION NOTES

1. UNLESS OTHERWISE NOTED, REMOVE ALL ELECTRICAL MATERIALS AND EQUIPMENT FROM AREAS INDICATED FOR DEMOLITION.
2. REMOVE UNUSED CONDUIT TO THE EXTENT NECESSARY TO ACCOMMODATE NEW WORK AND WHERE CONDUIT IS VISIBLE ABOVE THE FLOOR LINE. EXISTING UNUSED CONDUIT WHICH IS CONCEALED, AND WHICH DOES NOT INTERFERE WITH THE WORK, MAY REMAIN IN PLACE. SEAL ENDS OF ABANDONED LINES THAT REMAIN IN PLACE BEHIND WALLS OR FLOOR SURFACES. REMOVE EXISTING UNUSED WIRES.
3. WIRING AND CONDUIT TO ELECTRICAL DEVICES BEING REMOVED SHALL BE REMOVED BACK TO NEAREST JUNCTION BOX. ANY DEVICES DOWNSTREAM FROM THESE POINTS SHALL REMAIN OPERABLE.
4. REMOVE ALL ELECTRICAL WORK FROM PARTITIONS AND WALLS BEING REMOVED. REMOVE AND/OR RELOCATE ALL LIGHTING FIXTURES SHOWN REQUIRING WORK. WORK INCLUDES REWIRING TO THE FIXTURES, SWITCHES AND RECEPTACLES. CONNECTION TO EXISTING CIRCUITS SHALL BE MADE EXCEPT WHERE OVERLOADING OCCURS; IN WHICH CASE, CONTRACTOR SHALL PROVIDE A NEW HOMERUN TO CLOSEST AVAILABLE PANEL AND PROVIDE A NEW CIRCUIT BREAKER EQUAL TO EXISTING. THE CIRCUITS TO NEW EQUIPMENT BY OTHER SHALL BE NEW HOMERUNS AND NEW CIRCUIT BREAKERS ADEQUATE FOR THE LOAD CONNECTED.
5. UPON COMPLETION OF WORK, ENSURE ALL EXISTING CIRCUITS ADJACENT TO THE REMODELED AREA(S) ARE IN PROPER WORKING CONDITION.
6. MAKE ALL NECESSARY ADJUSTMENTS TO ELECTRICAL DEVICES REQUIRED TO ACCOMMODATE NEW WALLS AND CEILINGS. BECAUSE UNFORESEEN INTERFERENCES MAY OCCUR, CLOSE COORDINATION BETWEEN TRADES IS REQUIRED. VERIFY ALL CONNECTION REQUIREMENTS BEFORE ROUGH-IN.
7. CAREFULLY STORE AND PACKAGE ALL REMOVED BALLASTS & LAMPS. DISPOSE OF ACCORDING TO EPA REQUIREMENTS. ALL FEES ASSOCIATED WITH LEGAL DISPOSAL OF LAMPS & BALLASTS SHALL BE PAID FOR BY THE CONTRACTOR.

ABBREVIATIONS

ACT	ABOVE COUNTERTOP
AFF	ABOVE FINISHED FLOOR
C	CONDUIT
CLG	DEVICE LOCATED ON CEILING
DN	DOWN
EC	ELECTRICAL CONTRACTOR
EM	FIXTURE ON EMERGENCY GENERATOR CIRCUIT
ER	EXISTING ELECTRICAL DEVICE SHOWN AT RELOCATED POSITION
EWC	ELECTRIC WATER COOLER (PROVIDE GFI TYPE BREAKER)
EX	EXISTING ELECTRICAL DEVICE TO REMAIN
GFI	GROUND FAULT INTERRUPTER
G	GROUND
NIS	NOT IN SCOPE
PNL	ELECTRICAL PANEL
RE	REPLACE EXISTING DEVICE (AND COVER PLATE) AT THIS LOCATION
REL	RELOCATE EXISTING DEVICE
TYP	TYPICAL
UNO	UNLESS NOTED OTHERWISE

GENERAL NOTES

1. DRAWINGS ARE DIAGRAMMATIC, INDICATIVE OF WORK TO BE FURNISHED AND INSTALLED UNDER THIS CONTRACT. REFER TO ARCHITECTURAL AND STRUCTURAL DRAWINGS FOR ALL DIMENSIONS.
2. FIELD VERIFY ALL DIMENSIONS AND ALL CONDITIONS. IF THE CONTRACTOR IS UNABLE TO INTERPRET THE CONTRACT DOCUMENTS, HE IS RESPONSIBLE TO REQUEST CLARIFICATION IN WRITING TO THE ARCHITECT. IF HE PROCEEDS WITH ANY WORK BEFORE OBTAINING CLARIFICATION, HE SHALL BE HELD RESPONSIBLE FOR ALL DEFICIENCIES ASSOCIATED THEREWITH.
3. BEFORE SUBMITTING FOR THE WORK, EACH BIDDER WILL BE RESPONSIBLE TO EXAMINE THE PREMISES AND SATISFY HIMSELF AS TO THE EXISTING CONDITIONS UNDER WHICH HE WILL BE OBLIGED TO OPERATE AND COMPLETE THE WORK UNDER THIS CONTRACT. NO ALLOWANCE WILL SUBSEQUENTLY BE MADE IN THIS CONNECTION ON BEHALF OF THE CONTRACTOR FOR ANY ERROR OR OMISSION ON HIS PART.
4. THE CONTRACTOR SHALL PAY FOR ALL INSPECTION PERMITS, CERTIFICATES, CONNECTION FEES, SYSTEM DEMAND CHARGES AND LICENSE FEES IN CONNECTION WITH HIS WORK.
5. CONSTRUCTION MANAGER/GENERAL CONTRACTOR SHALL BE RESPONSIBLE FOR COORDINATING WORK OF ALL SUBCONTRACTORS TO AVOID INTERFERENCES.
6. ALL WORK SHALL COMPLY WITH APPLICABLE O.S.H.A. AND E.P.A. REGULATIONS AND GUIDELINES.
7. ERECT AND MAINTAIN ALL REASONABLE PRECAUTIONS FOR SAFETY AND HEALTH INCLUDING POSTING DANGER SIGNS AND OTHER WARNINGS AGAINST HAZARDS INCLUDING PROMULGATING SAFETY REGULATIONS. PROVIDE SAFETY PRECAUTIONS AND BARRICADES FOR PEDESTRIANS AT CONSTRUCTION VEHICLE ACCESS AND EGRESS LOCATIONS.
8. COORDINATE AND SEQUENCE ALL DEMOLITION, CLEANING AND CONSTRUCTION WORK. SUBMIT A COMPLETELY DETAILED CONSTRUCTION SCHEDULE PRIOR TO PRE-CONSTRUCTION CONFERENCE.
9. THE CONTRACTOR SHALL STRICTLY BE HELD TO THE PROJECT SCHEDULE. HE SHALL PROVIDE SUFFICIENT MANPOWER AND EQUIPMENT TO FULLY MOBILIZE, PROCEED WITH AND COMPLETE THE WORK.
10. THE CONTRACTOR SHALL BE RESTRICTED TO AREAS SPECIFIED BY THE OWNER FOR ON-SITE STORAGE OF CONSTRUCTION MATERIALS. THE CONTRACTOR IS RESPONSIBLE FOR THE PROTECTION AND SECURITY OF ALL EQUIPMENT AND MATERIALS.
11. THE CONTRACTOR SHALL MAINTAIN A CLEAN WORK ENVIRONMENT AT ALL TIMES AND SHALL CLEAN CONSTRUCTION SITE OF ALL DEBRIS AT COMPLETION OF THE JOB AND BEFORE FINAL PAYMENT IS MADE.
12. THE CONTRACTOR SHALL FURNISH "AS-BUILT" DRAWINGS TO THE (CONTRACTING OFFICER) (OWNER) AT COMPLETION OF CONSTRUCTION.
13. CONTRACTOR'S USE OF AN APPROVAL STAMP ON DOCUMENTS SUBMITTED AS SHOP DRAWINGS, PRODUCT DATA, SAMPLES AND SIMILAR SUBMITTALS CERTIFIES THAT THE CONTRACTOR HAS COMPLIED WITH THE CONTRACT DOCUMENT REQUIREMENTS RELATED TO "SHOP DRAWINGS, PRODUCT DATA AND SAMPLES".
14. THE CONTRACTOR SHALL NOT BE RELIEVED OF RESPONSIBILITY FOR DEVIATIONS FROM REQUIREMENTS OF THE CONTRACT DOCUMENTS BY THE ARCHITECT/ENGINEER'S APPROVAL OF SHOP DRAWINGS, PRODUCT DATA, SAMPLES OR SIMILAR SUBMITTALS UNLESS THE CONTRACTOR HAS SPECIFICALLY INFORMED THE ARCHITECT/ENGINEER IN WRITING OF SUCH DEVIATION AT THE TIME OF SUBMITTAL AND THE ARCHITECT/ENGINEER HAS GIVEN WRITTEN APPROVAL TO THE SPECIFIC DEVIATION. THE CONTRACTOR SHALL NOT BE RELIEVED OF RESPONSIBILITY FOR ERRORS OR OMISSIONS IN SHOP DRAWINGS, PRODUCT DATA, SAMPLES OR SIMILAR SUBMITTALS BY THE ARCHITECT/ENGINEER'S APPROVAL THEREOF.
15. PRIOR TO INSTALLATION, COORDINATE AND ADJUST THE FINAL LOCATION OF ALL WALL MOUNTED DEVICES AND EQUIPMENT WITH ALL CASEWORK, SHELVING, BLACKBOARDS, BULLETIN BOARDS OR OTHER WALL MOUNTED FURNISHINGS.
16. NOTE ANY SPECIAL REQUIREMENTS INVOLVED IN INSTALLING THE EQUIPMENT IN THE BUILDING. DISMANTLING AND REASSEMBLING OF ANY EQUIPMENT SHALL BE DONE AS REQUIRED FOR ENTRY INTO THE BUILDING AND EQUIPMENT ROOMS.
17. SUPPORTS AND HANGERS SHALL PRESENT A NEAT, ORDERLY APPEARANCE. ALL EXTERIOR STRUCTURES INCLUDED, BUT NOT LIMITED TO, THE GENERATOR AND GENERATOR FENCE/WALL SHALL BE INSTALLED TO RESIST 110 MPH WIND LOAD.
18. CONTRACTOR SHALL MAINTAIN THE INTEGRITY OF ALL FIRE AND SMOKE WALL ASSEMBLIES AND ACOUSTICAL WALLS.
19. BEAM AND FLOOR PENETRATIONS SHALL BE APPROVED BY THE STRUCTURAL ENGINEER. BEAM SLEEVES AND BEAM REINFORCING APPROVED BY STRUCTURAL ENGINEER SHALL BE FURNISHED AND INSTALLED BY THIS CONTRACTOR.
20. CONTRACTOR SHALL FURNISH U.L. APPROVED DRAWINGS FOR EACH TYPE OF FIRE RATED ASSEMBLY PENETRATION BY DUCTS, PIPES OR CONDUITS. THESE DRAWINGS SHALL BE DISPLAYED ON THE JOB SITE AT ALL TIMES DURING CONSTRUCTION. SEE SPECIFICATIONS.
21. THE BUILDING WILL REMAIN OCCUPIED DURING CONSTRUCTION. THE OWNER WILL MAKE ALL REASONABLE EFFORTS TO ASSIST THE CONTRACTOR IN COMPLETING THE WORK. COORDINATE ALL WORK WITH THE OWNER'S DESIGNATED REPRESENTATIVE.
22. EXIT WAYS SHALL BE KEPT CLEAR. IF AN EXIT MUST BE TEMPORARILY BLOCKED, PROVIDE THE REQUIRED BARRICADE AND DIRECTIONAL SIGNS FOR TEMPORARY EXITING AND SAFETY.
23. REMOVE AND RE-INSTALL EXISTING CEILING TILE AS REQUIRED. REPLACE ANY TILE DAMAGED OR SOILED DURING CONSTRUCTION.
24. PROVIDE PROPER PROTECTIVE MEASURES TO PROTECT EXISTING FURNITURE, CARPET AND FINISHES DURING THE COURSE OF CONSTRUCTION. TAKE CARE NOT TO DAMAGE EXISTING SURFACES. REPAIR TO MATCH EXISTING CONDITIONS AS REQUIRED.
25. SEAL ALL HOLES IN WALLS, CEILINGS, FLOORS, ETC. TO MATCH EXISTING ADJACENT SURFACES WHERE EQUIPMENT, CONDUIT AND/OR PIPING ARE REMOVED.
26. ALL EXISTING EQUIPMENT IS THE PROPERTY OF THE OWNER AND SHALL BE DISPOSED OF AS DIRECTED BY THE OWNER. DISPOSE OF ALL MATERIALS AND EQUIPMENT SHOWN TO BE REMOVED IN ACCORDANCE WITH LOCAL REGULATIONS.
27. ITEMS REMOVED AND SAVED FOR REUSE SHALL BE PROTECTED FROM DAMAGE DURING CONSTRUCTION. CONTRACTOR SHALL IDENTIFY ANY DEFECTIVE MATERIALS PRIOR TO DEMOLITION. CONTRACTOR SHALL BE RESPONSIBLE FOR ALL DAMAGE TO MATERIALS AT PROJECT COMPLETION NOT IDENTIFIED PRIOR TO DEMOLITION.
28. RELOCATE, AS REQUIRED, ANY EXISTING WIRE AND CONDUIT WHICH INTERFERES WITH INSTALLATION OF THE NEW WORK.
29. REMOVE ALL ELECTRICAL EQUIPMENT (CONDUIT, POWER & CONTROL WIRING, DISCONNECT SWITCHES, STARTERS, ETC.) RELATED TO EQUIPMENT BEING REMOVED OR REPLACED.
30. FIRE ALARM DRAWINGS INDICATE DESIGN INTENT. ACTUAL DEVICE TYPES, QUANTITIES AND LOCATIONS SHALL BE VERIFIED BY THE FIRE ALARM CONTRACTOR TO MEET ALL APPLICABLE CODES AND STANDARDS. ANY DEVIATIONS FROM THE DRAWINGS SHALL BE INDICATED ON FIRE ALARM SHOP DRAWINGS SUBMITTED BY THE FIRE ALARM CONTRACTOR.

DRAWING INDEX

E001 - GENERAL NOTES & LEGENDS
E002 - SPECIFICATIONS
E101 - PARTIAL FOURTH FLOOR PLAN - LIGHTING DEMOLITION
E102 - PARTIAL FOURTH FLOOR PLAN - LIGHTING RENOVATION
E201 - PARTIAL FOURTH FLOOR PLAN - POWER DEMOLITION
E202 - PARTIAL FOURTH FLOOR PLAN - POWER RENOVATION
E301 - DETAILS & PANEL SCHEDULES

DODSTONE ARCHITECTS
3011-1 Powell Road | Tallahassee, FL 32308
850.656.7326 | #AA26001632

This item has been electronically signed and sealed by Peter C. Lindstrom, P.E. on 10/25/2018 using a Digital Signature.
Printed copies of this document are not considered signed and sealed, and the signature must be verified on any electronic copies.

H2 ENGINEERING
114 EAST 5th AVENUE
TALLAHASSEE, FL 32303
PHONE 850.224.7922
www.H2Engineering.com
H2E PROJECT No. 18-28

THIS DOCUMENT IS THE PROPERTY OF H2Engineering AND IS PREPARED AS AN INSTRUMENT OF SERVICE. ITS USE, REUSE OR REPRODUCTION, EXCEPT BY WRITTEN AGREEMENT WITH H2ENGINEERING, INC., IS PROHIBITED.

Florida Certificate of Authorization #2485
Peter C. Lindstrom, P.E. #47096

OFFICE OF THE STATE ATTORNEY, SECOND JUDICIAL CIRCUIT
4th Floor Renovation, Suite 443
301 S. MOROE ST.
TALLAHASSEE, FL 32301
PROJECT NUMBER: 18207
18207 16163 SD 21 2.pln

AS INSTRUMENTS OF SERVICE, THESE DRAWINGS AND THE DESIGN ARE THE PROPERTY OF THE DODSTONE GROUP ARCHITECTS AND AS SUCH ARE PROTECTED BY STATE AND FEDERAL COPYRIGHT LAWS. REPRODUCTION OR USE OF THESE DRAWINGS OTHER THAN FOR THE PROJECT INTENDED WITHOUT WRITTEN CONSENT FROM THE DODSTONE GROUP ARCHITECTS IS PROHIBITED.

DATE	SUBMISSION TITLE
08/15/2018	MEASURED DRAWINGS
09/11/2018	60% CONSTRUCTION DOCUMENTS
10/04/2018	100% CONSTR DOCUMENTS
10/26/2018	PERMIT SET
DATE	REVISION TITLE

DRAWN BY: DRH CHECKED BY: PCL

GENERAL NOTES & LEGENDS

E001

SPECIFICATIONS

SECTION 260519 - LOW-VOLTAGE ELECTRICAL POWER CONDUCTORS AND CABLES

PART 2 - PRODUCTS

2.1 COPPER BUILDING WIRE

A. Standards:

1. Listed and labeled as defined in NFPA 70, by a qualified testing agency, and marked for intended location and use.
2. RoHS compliant.
3. Conductor and Cable Marking: Comply with wire and cable marking according to UL's "Wire and Cable Marking and Application Guide."

B. Conductors: Copper: complying with ASTM B 3 for bare annealed copper and with ASTM B 8 for stranded conductors.

C. Conductor Insulation: Type THHN and Type THWN-2: Comply with UL 83.

2.2 METAL-CLAD CABLE, TYPE MC

A. Standards:

1. MC Cable is only permitted in existing walls.
2. Listed and labeled as defined in NFPA 70, by a qualified testing agency, and marked for intended location and use.
3. Comply with UL 1569.
4. RoHS compliant.
5. Conductor and Cable Marking: Comply with wire and cable marking according to UL's "Wire and Cable Marking and Application Guide."

B. Circuits: Single circuit

C. Conductors: Copper, complying with ASTM B 3 for bare annealed copper and with ASTM B 8 for stranded conductors.

D. Ground Conductor: Insulated.

E. Conductor Insulation: Type TFN/THHN/THWN-2: Comply with UL 83.

F. Armor: Aluminum, interlocked.

2.3 CONNECTORS AND SPLICES

A. Description: Factory-fabricated connectors, splices, and lugs of size, ampacity rating, material, type, and class for application and service indicated; listed and labeled as defined in NFPA 70, by a qualified testing agency, and marked for intended location and use.

PART 3 - EXECUTION

3.1 INSTALLATION

A. Branch Circuits: Copper. Solid for No. 10 AWG and smaller; stranded for No. 8 AWG and larger.

B. Use pulling means, including fish tape, cable, rope, and basket-weave wire/cable grips, that will not damage cables or raceway.

C. Install exposed raceways and cables parallel and perpendicular to surfaces of exposed structural members, and follow surface contours where possible.

D. Tighten electrical connectors and terminals according to manufacturer's published torque-tightening values. If manufacturer's torque values are not indicated, use those specified in UL 486A-486B.

E. Make splices, terminations, and taps that are compatible with conductor material and that possess equivalent or better mechanical strength and insulation ratings than unspliced conductors.

F. Wiring at Outlets: Install conductor at each outlet, with at least 6 inches (150 mm) of slack.

G. Apply firestopping to electrical penetrations of fire-rated floor and wall assemblies to restore original fire-resistance rating of assembly.

SECTION 260533 - RACEWAYS AND BOXES FOR ELECTRICAL SYSTEMS

PART 2 - PRODUCTS

2.1 METAL CONDUIT AND FITTINGS

A. Metal Conduit:

1. Listing and Labeling: Listed and labeled as defined in NFPA 70, by a qualified testing agency, and marked for intended location and application.
2. EMT: Comply with ANSI C80.3 and UL 797.
3. FMC: Comply with UL 1; zinc-coated steel.

B. Metal Fittings:

1. Comply with NEMA FB 1 and UL 514B.
2. Listing and Labeling: Listed and labeled as defined in NFPA 70, by a qualified testing agency, and marked for intended location and application.
3. Fittings, General: Listed and labeled for type of conduit, location, and use.
4. Fittings for EMT:
   a) Material: Steel.
   b) Type: Compression.

2.2 BOXES, ENCLOSURES, AND CABINETS

A. Sheet Metal Outlet and Device Boxes: Comply with NEMA OS 1 and UL 514A.

B. Device Box Dimensions: 4 Inches square by 2-1/8 Inches deep (100 mm square by 60 mm deep) or 4 Inches by 2-1/8 Inches by 2-1/8 inches deep (100 mm by 60 mm by 60 mm deep) as indicated.

PART 3 - EXECUTION

3.1 Installation

A. Conduit shall be EMT unless noted otherwise. Install no more than the equivalent of three 90-degree bends in any conduit run except for control wiring conduits, for which fewer bends are allowed. Support within 12 inches (300 mm) of changes in direction.

B. Conceal conduit and EMT within finished walls, ceilings, and floors unless otherwise indicated. Install conduits parallel or perpendicular to building lines.

C. Support conduit within 12 inches (300 mm) of enclosures to which attached.

D. Stub-ups to Above Recessed Ceilings: Use a conduit bushing or insulated fitting to terminate stub-ups not terminated in hubs or in an enclosure.

E. Terminate threaded conduits into threaded hubs or with locknuts on inside and outside of boxes or cabinets. Install bushings on conduits up to 1-1/4-inch (35mm) trade size and insulated throat metal bushings on 1-1/2-inch (41-mm) trade size and larger conduits terminated with locknuts. Install insulated throat metal grounding bushings on service conduits.

F. Install raceways square to the enclosure and terminate at enclosures with locknuts. Install locknuts hand tight plus 1/4 turn more.

G. Do not rely on locknuts to penetrate nonconductive coatings on enclosures. Remove coatings in the locknut area prior to assembling conduit to enclosure to assure a continuous ground path.

H. Cut conduit perpendicular to the length. For conduits 2-inch (53-mm) trade size and larger, use roll cutter or a guide to make cut straight and perpendicular to the length.

I. Install pull wires in empty raceways. Use polypropylene or monofilament plastic line with not less than 200-lb (90-kg) tensile strength. Leave at least 12 inches (300 mm) of slack at each end of pull wire. Cap underground raceways designated as spare above grade alongside raceways in use.

J. Flexible Conduit Connections: Comply with NEMA RV 3. Use a maximum of 72 inches (1830 mm) of flexible conduit for recessed and semirecessed luminaires, equipment subject to vibration, noise transmission, or movement; and for transformers and motors.

K. Mount boxes at heights indicated on Drawings. If mounting heights of boxes are not individually indicated, give priority to ADA requirements. Install boxes with height measured to center of box unless otherwise indicated.

L. Recessed Boxes in Masonry Walls: Saw-cut opening for box in center of cell of masonry block, and install box flush with surface of wall. Prepare block surfaces to provide a flat surface for a raintight connection between box and cover plate or supported equipment and box.

M. Horizontally separate boxes mounted on opposite sides of walls so they are not in the same vertical channel.

N. Locate boxes so that cover or plate will not span different building finishes.

O. Support boxes of three gangs or more from more than one side by spanning two framing members or mounting on brackets specifically designed for the purpose.

P. Fasten junction and pull boxes to or support from building structure. Do not support boxes by conduits.

Q. Install firestopping at penetrations of fire-rated floor and wall assemblies.

SECTION 260553 - IDENTIFICATION FOR ELECTRICAL SYSTEMS

PART 2 - PRODUCTS

2.1 LABELS

A. Self-Adhesive Wraparound Labels: Preprinted, 3-mil- (0.08-mm-) thick, vinyl flexible label with acrylic pressure-sensitive adhesive.

B. Self-Adhesive Labels: Vinyl, thermal, transfer-printed, 3-mil- (0.08-mm-) thick, multicolor, weather- and UV-resistant, pressure-sensitive adhesive labels, configured for intended use and location.

C. Minimum Nominal Size:

1. 1-1/2 by 6 inches (37 by 150 mm) for raceway and conductors.
2. 3-1/2 by 5 inches (76 by 127 mm) for equipment.
3. As required by authorities having jurisdiction.

2.2 TAPES AND STENCILS

A. Self-Adhesive Vinyl Tape: Colored, heavy duty, waterproof, fade resistant; not less than 3 mils (0.08 mm) thick by 1 to 2 inches (25 to 50 mm) wide; compounded for outdoor use.

B. Tape and Stencil: 4-inch- (100-mm-) wide black stripes on 10-inch (250-mm) centers placed diagonally over orange background and is 12 inches (300 mm) wide. Stop stripes at legends.

C. Floor Marking Tape: 2-inch- (50-mm-) wide, 5-mil (0.125-mm) pressure-sensitive vinyl tape, with yellow and black stripes and clear vinyl overlay.

D. Tag:

1. Detectable three-layer laminate, consisting of a printed pigmented polyolefin film, a solid aluminum-foil core, and a clear protective film that allows inspection of the continuity of the conductive core; bright colored, compounded for direct-burial service.
2. Width: 3 inches (75 mm).
3. Overall Thickness: 5 mils (0.125 mm).
4. Foil Core Thickness: 0.35 mil (0.00889 mm).
5. Weight: 28 lb/1000 sq. ft. (13.7 kg/100 sq. m).
6. Tensile according to ASTM D 882: 70 lbf (311.3 N) and 4600 psi (31.7 MPa).

2.3 SIGNS

E. Laminated Acrylic or Melamine Plastic Signs:

1. Thickness:
   a) For signs up to 20 sq. in. (129 sq. cm), minimum 1/16 inch (1.6 mm) thick.
   b) For signs larger than 20 sq. in. (129 sq. cm), 1/8 inch (3.2 mm) thick.
2. Engraved legend with black letters on white face.
3. Self-adhesive.
4. Framed with mitered acrylic molding and arranged for attachment at applicable equipment.

2.4 MISCELLANEOUS IDENTIFICATION PRODUCTS

A. Paint: Comply with requirements in painting Sections for paint materials and application requirements. Retain paint system applicable for surface material and location (exterior or interior).

PART 3 - EXECUTION

3.1 IDENTIFICATION SCHEDULE

A. Install identification materials and devices at locations for most convenient viewing without interference with operation and maintenance of equipment. Install access doors or panels to provide view of identifying devices.

B. Identify conductors, cables, and terminals in enclosures and at junctions, terminals, pull points, and locations of high visibility. Identify by system and circuit designation.

C. Accessible Raceways and Metal-Clad Cables, 600 V or Less, for Service, Feeder, and Branch Circuits, More Than 50 A and 120 V to Ground: Identify with self-adhesive wraparound labels.

1. Locate identification at changes in direction, at penetrations of walls and floors, at 50-foot (15-m) maximum intervals in straight runs, and at 25-foot (7.6-m) maximum intervals in congested areas.

D. Accessible Fittings for Raceways and Cables within Buildings: Identify the covers of each junction and pull box paint and circuit designation.

E. Power-Circuit Conductor Identification, 600 V or Less: For conductors in vaults, pull and junction boxes, manholes, and handholes, use self-adhesive vinyl tape to identify the phase.

F. Control-Circuit Conductor Identification: For conductors and cables in pull and junction boxes, manholes, and handholes, use self-adhesive labels with the conductor or cable designation, origin, and destination.

G. Control-Circuit Conductor Termination Identification: For identification at terminations, provide self-adhesive labels with the conductor designation.

H. Auxiliary Electrical Systems Conductor Identification: Self-adhesive vinyl tape that is uniform and consistent with system used by manufacturer for factory-installed connections.

1. Identify conductors, cables, and terminals in enclosures and at junctions, terminals, and pull points. Identify by system and circuit designation.

I. Workspace Indication: Apply floor marking tape to finished surfaces. Show working clearances in the direction of access to live parts. Workspace shall comply with NFPA 70 and 29 CFR 1926.403 unless otherwise indicated. Do not install at flush-mounted panelboards and similar equipment in finished spaces.

J. Instructional Signs: Self-adhesive labels, including the color code for grounded and ungrounded conductors.

K. Warning Labels for Indoor Cabinets, Boxes, and Enclosures for Power and Lighting: Self-adhesive labels.

1. Apply to exterior of door, cover, or other access.
2. For equipment with multiple power or control sources, apply to door or cover of equipment, including, but not limited to, the following:
   a) Power-transfer switches.
   b) Controls with external control power connections.

M. Arc Flash Warning Labeling: Self-adhesive labels.

N. Equipment Identification Labels:

1. Indoor Equipment: Laminated acrylic or melamine plastic sign.
2. Outdoor Equipment: Laminated acrylic or melamine sign.

SECTION 262416 - PANELBOARDS

PART 2 - PRODUCTS

2.1 PANELBOARDS COMMON REQUIREMENTS

A. Phase, Neutral, and Ground Buses:

1. Material: Hard-drawn copper, 98 percent conductivity. Bus shall be fully rated the entire length.
2. Full-Sized Neutral: Equipped with full-capacity bonding strap for service entrance applications. Mount electrically isolated from enclosure. Do not mount neutral bus in gutter.

B. Conductor Connectors: Suitable for use with conductor material and sizes.

1. Material: Hard-drawn copper, 98 percent conductivity.
2. Terminations shall allow use of 75 deg C rated conductors without derating.
3. Size: Lugs suitable for indicated conductor sizes, with additional gutter space, if required, for larger conductors.
4. Main and Neutral Lugs: Mechanical type with a lug on the neutral bar for each pole in the panelboard.
5. Ground Lugs and Bus-Configured Terminators: Mechanical type with a lug on the bar for each pole in the panelboard.

2.2 POWER PANELBOARDS

A. Branch Overcurrent Protective Devices: Bolt-on circuit breakers.

B. Doors: Concealed hinges; secured with flush latch with tumbler lock; keyed alike.

PART 3 - IDENTIFICATION

A. Panelboard Label: Manufacturer's name and trademark, voltage, amperage, number of phases, and number of poles shall be located on the interior of the panelboard door.

B. Breaker Labels: Faceplate shall list current rating, UL and IEC certification standards, and AIC rating.

C. Circuit Directory: Computer-generated circuit directory mounted inside panelboard door with transparent plastic protective cover. Circuit directory shall identify specific purpose with detail sufficient to distinguish it from all other circuits.

SECTION 262726 - WIRING DEVICES

PART 2 - PRODUCTS

2.1 GENERAL WIRING-DEVICE REQUIREMENTS

A. Wiring Devices, Components, and Accessories: Listed and labeled as defined in NFPA 70, by a qualified testing agency, and marked for intended location and application.

B. Comply with NFPA 70.

C. Source Limitations: Obtain each type of wiring device and associated wall plate from single source from single manufacturer.

2.2 STRAIGHT-BLADE RECEPTACLES

A. Duplex Convenience Receptacles: 125 V, 20 A; comply with NEMA WD 1, NEMA WD 6 Configuration 5-20R, UL 498, and FS W-C-596.

2.3 GFCI RECEPTACLES

A. General Description:

1. 125 V, 20 A, straight blade, non-feed-through type.
2. Comply with NEMA WD 1, NEMA WD 6 Configuration 5-20R, UL 498, UL 943 Class A, and FS W-C-596.
3. Include indicator light that shows when the GFCI has malfunctioned and no longer provides proper GFCI protection.

2.4 WALL PLATES

A. Single and combination types shall match corresponding wiring devices.

1. Plate-Securing Screws: Metal with head color to match plate finish.
2. Material: Stainless steel.

2.5 FINISHES

A. Device Color:

1. Wiring Devices Connected to Normal Power System: White unless otherwise indicated or required by NFPA 70 or device listing.
2. Wiring Devices Connected to Emergency Power System: Red.

PART 3 - EXECUTION

3.1 INSTALLATION

A. Comply with NECA 1, including mounting heights listed in that standard, unless otherwise indicated.

B. Conductors:

1. Do not strip insulation from conductors until right before they are spliced or terminated on devices.
2. Strip insulation evenly around the conductor using tools designed for the purpose. Avoid scoring or nicking of solid wire or cutting strands from stranded wire.
3. The length of free conductors at outlets for devices shall meet provisions of NFPA 70, Article 300, without pigtails.
4. Existing Conductors:
   a) Cut back and pigtail, or replace all damaged conductors.
   b) Straighten conductors that remain and remove corrosion and foreign matter.
   c) Pigtailing existing conductors is permitted, provided the outlet box is large enough.

C. Device Installation:

1. Replace devices that have been in temporary use during construction and that were installed before building finishing operations were complete.
2. Keep each wiring device in its package or otherwise protected until it is time to connect conductors.
3. Do not remove surface protection, such as plastic film and smudge covers, until the last possible moment.
4. Connect devices to branch circuits using pigtails that are not less than 6 inches (152 mm) in length.
5. When there is a choice, use side wiring with binding-head screw terminals. Wrap solid conductor tightly clockwise, two-thirds to three-fourths of the way around terminal screw.
6. Use a torque screwdriver when a torque is recommended or required by manufacturer.
7. When conductors larger than No. 12 AWG are installed on 15- or 20-A circuits, splice No. 12 AWG pigtails for device connections.
8. Tighten unused terminal screws on the device.

D. Receptacle Orientation: Install ground pin of vertically mounted receptacles up, and on horizontally mounted receptacles to the right.

E. Device Plates: Do not use oversized or extra-deep plates. Repair wall finishes and remount outlet boxes when standard device plates do not fit flush or do not cover rough wall opening.

DODSTONE ARCHITECTS
3011-1 Powell Road | Tallahassee, FL 32308
850.656.7326 | #AA26001632

This item has been electronically signed and sealed by **Peter C. Lindstrom, P.E.** on **10/25/2018** using a Digital Signature.

Printed copies of this document are not considered signed and sealed, and the signature must be verified on any electronic copies.

H2 ENGINEERING
114 EAST 5th AVENUE
TALLAHASSEE, FL 32303
PHONE 850.224.7922
www.H2Engineering.com

H2E PROJECT No. **18-28**

THIS DOCUMENT IS THE PROPERTY OF H2Engineering AND IS PREPARED AS AN INSTRUMENT OF SERVICE. ITS USE, REUSE OR REPRODUCTION, EXCEPT BY WRITTEN AGREEMENT WITH H2ENGINEERING, INC., IS PROHIBITED.

Florida Certificate of Authorization #2485
Peter C. Lindstrom, P.E. #47096

OFFICE OF THE STATE ATTORNEY, SECOND JUDICIAL CIRCUIT
4th Floor Renovation, Suite 443
301 S. MOROE ST.
TALLAHASSEE, FL 32301

PROJECT NUMBER: 18207
18207 16163 SD 21 2.pln

AS INSTRUMENTS OF SERVICE, THESE DRAWINGS AND THE DESIGN ARE THE PROPERTY OF THE DODSTONE GROUP ARCHITECTS AND AS SUCH ARE PROTECTED BY STATE AND FEDERAL COPYRIGHT LAWS. REPRODUCTION OR USE OF THESE DRAWINGS OTHER THAN FOR THE PROJECT INTENDED WITHOUT WRITTEN CONSENT FROM THE DODSTONE GROUP ARCHITECTS IS PROHIBITED.

DATE	SUBMISSION TITLE
08/15/2018	MEASURED DRAWINGS
09/11/2018	60% CONSTRUCTION DOCUMENTS
10/04/2018	100% CONSTR DOCUMENTS
10/26/2018	PERMIT SET

DATE	REVISION TITLE

DRAWN BY: DRH CHECKED BY: PCL

SPECIFICATIONS

E002

GENERAL NOTES - DEMOLITION

1. ALL DEVICES SHOWN DASHED SHALL BE DEMOLISHED. ALL OTHER DEVICES ARE EXISTING TO REMAIN.

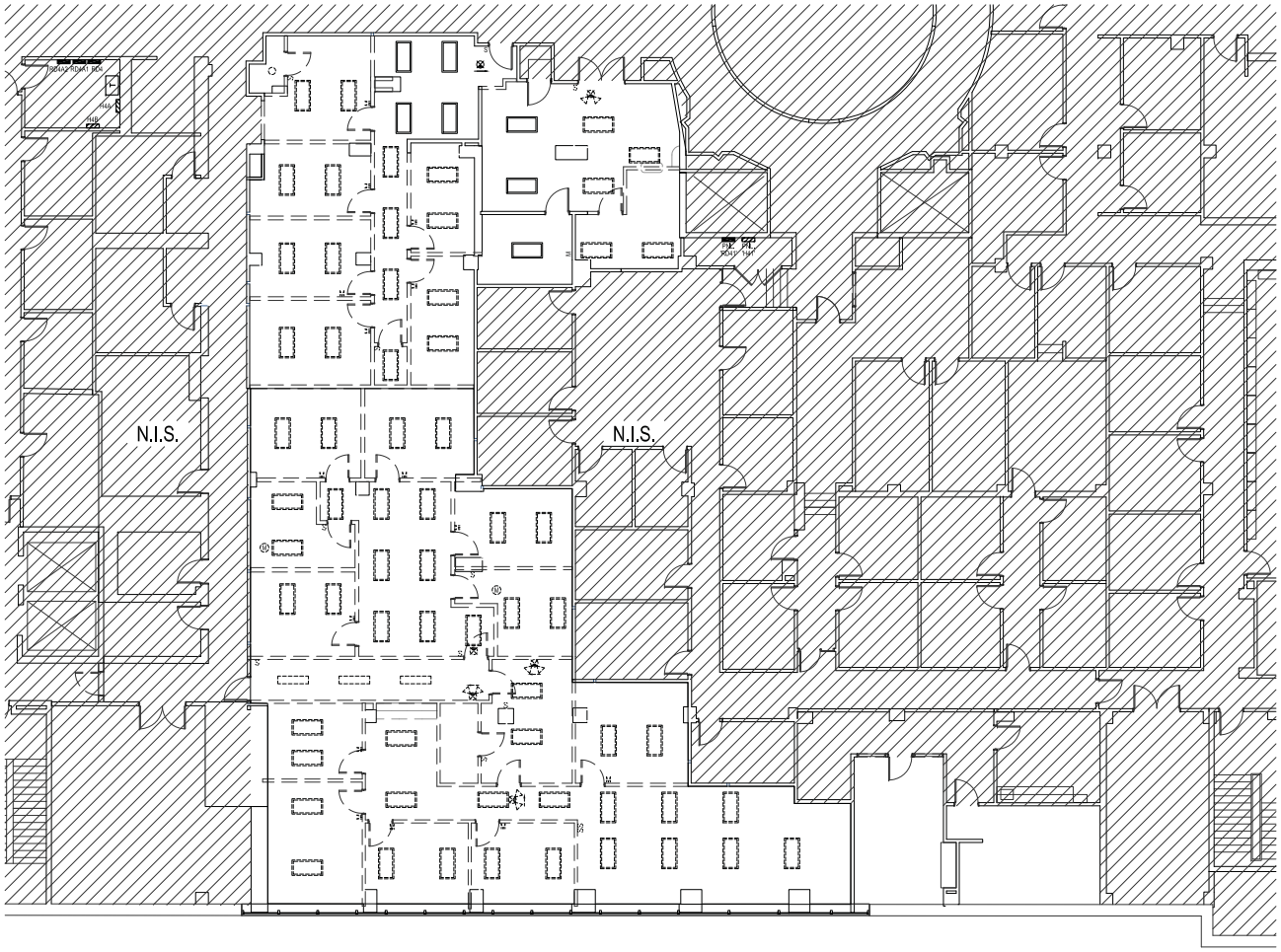

E1 PARTIAL FOURTH FLOOR PLAN - LIGHTING DEMOLITION
SCALE: 1/8" = 1'-0"

N

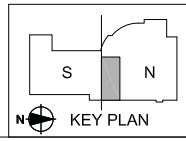

DODSTONE ARCHITECTS
3011-1 Powell Road | Tallahassee, FL 32308
(850)893-0333 | www.dodstone.com

This item has been electronically signed and sealed by Peter C. Lindstrom, P.E. on 10/23/2018 using a Digital Signature.
Printed copies of this document are not considered signed and sealed, and the signature must be verified on any electronic copies.

ICE ENGINEERING
114 EAST 5th AVENUE
TALLAHASSEE, FL 32303
PHONE 850.224.7322
www.ICEengineering.com
ICE PROJECT No. 16-29

THE DOCUMENT IS THE PROPERTY OF ICE Engineering AND IS PREPARED AS AN INSTRUMENT OF SERVICE. ITS USE, REUSE OR REPRODUCTION, EXCEPT BY WRITTEN AGREEMENT WITH ICE ENGINEERING, INC., IS PROHIBITED.

Florida Certificate of Authorization #2485
Peter C. Lindstrom, P.E. #47598

OFFICE OF THE STATE ATTORNEY,
SECOND JUDICIAL CIRCUIT
4th Floor Renovation,
Suite 443
301 S. MONROE ST.
TALLAHASSEE, FL 32301
PROJECT NUMBER: 18207
DODSTONE ARCHITECTS

AS INSTRUMENTS OF SERVICE, THESE DRAWINGS AND THE DESIGNS INCORPORATED HEREIN, AS THE PROPERTY OF THE DODSTONE GROUP ARCHITECTS, ARE TO BE RECEIVED AND PROTECTED BY STATE AND FEDERAL COPYRIGHT LAWS. REPRODUCTION OF THESE DRAWINGS OTHER THAN FOR THE PROJECT SPECIFIED HEREIN WITHOUT WRITTEN CONSENT FROM THE DODSTONE GROUP ARCHITECTS IS PROHIBITED.

DATE	SUBMISSION TITLE
08/15/2018	MEASURED DRAWINGS
09/11/2018	65% CONSTRUCTION DOCUMENTS
10/04/2018	100% CONSTRUCTION DOCUMENTS

DATE	REVISION TITLE

DRAWN BY: GRU CHECKED BY: PCL

PARTIAL FOURTH FLOOR PLAN - LIGHTING DEMOLITION

E101

E1 PARTIAL FOURTH FLOOR PLAN - LIGHTING RENOVATION

SCALE: 1/8" = 1'-0"

N

GENERAL NOTES - RENOVATION

1. EXISTING DEVICES ARE SHOWN SHADED. ALL OTHER DEVICES ARE NEW.
2. ALL 2X2 FIXTURES ARE TYPE A, UNO.
3. ALL DOWNLIGHTS ARE TYPE B, UNO.
4. ALL EXIT LIGHTS ARE TYPE E, UNO.

KEY NOTES - RENOVATION

1. REFER TO DETAIL A/E301 FOR WIRING LIGHTS AND LIGHTING CONTROLS IN THIS ROOM.
2. REFER TO DETAIL B/E301 FOR WIRING LIGHTS AND LIGHTING CONTROLS IN THIS ROOM.
3. 2 #12, #12 G, IN 1/2" C, TO EXISTING NORMAL POWER LIGHTING CIRCUIT.
4. 2 #12, #12 G, IN 1/2" C, TO EXISTING EMERGENCY POWER CIRCUIT.

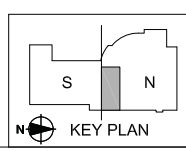

DODSTONE ARCHITECTS
3011-1 Powell Road | Tallahassee, FL 32308
850.893.0123 | dodstone.com

PETER C. LINDSTROM PROFESSIONAL ENGINEER No. 61998

This item has been electronically signed and sealed by Peter C. Lindstrom, P.E. on 10/23/2018 using a Digital Signature.

Printed copies of this document are not considered signed and sealed, and the signature must be verified on any electronic copies.

ICE ENGINEERING
114 EAST 5th AVENUE
TALLAHASSEE, FL 32303
PHONE 850.224.7522
www.ICEengineering.com

ICE PROJECT No. 16-29

THE DOCUMENT IS THE PROPERTY OF ICEengineering AND IS PREPARED AS AN INSTRUMENT OF SERVICE. ITS USE, REUSE OR REPRODUCTION, EXCEPT BY WRITTEN AGREEMENT WITH ICEENGINEERING, INC., IS PROHIBITED.

Florida Certificate of Authorization #2485
Peter C. Lindstrom, P.E. #61998

OFFICE OF THE STATE ATTORNEY,
SECOND JUDICIAL CIRCUIT
4th Floor Renovation,
Suite 443
301 S. MONROE ST.
TALLAHASSEE, FL 32301
PROJECT NUMBER: 18207
REF: PW0012-144

AS INSTRUMENTS OF SERVICE, THESE DRAWINGS AND THE DESIGNS INCORPORATED HEREIN, AS WELL AS THE ARCHITECT'S REPORTS, ARE PROTECTED BY STATE AND FEDERAL COPYRIGHT LAWS. REPRODUCTION OR USE OF THESE DRAWINGS OTHER THAN FOR THE PROJECT SPECIFIED HEREIN WITHOUT WRITTEN CONSENT FROM THE DODSTONE GROUP ARCHITECTS IS PROHIBITED.

DATE	SUBMISSION TITLE
06/15/2018	MEASURED DRAWINGS
09/17/2018	85% CONSTRUCTION DOCUMENTS
10/04/2018	100% CONSTRUCTION DOCUMENTS

DATE	REVISION TITLE

DRAWN BY: RPL CHECKED BY: RPL

PARTIAL FOURTH FLOOR PLAN - LIGHTING RENOVATION

E102

GENERAL NOTES - DEMOLITION

1. ALL DEVICES SHOWN DASHED SHALL BE DEMOLISHED. ALL OTHER DEVICES ARE EXISTING TO REMAIN.

KEY NOTES - DEMOLITION

D EXISTING FATC AND NAC PANEL TO BE RE-LOCATED. PRESERVE AND EXTEND FIRE ALARM CIRCUITS TO DEVICES THAT ARE EXISTING TO REMAIN.

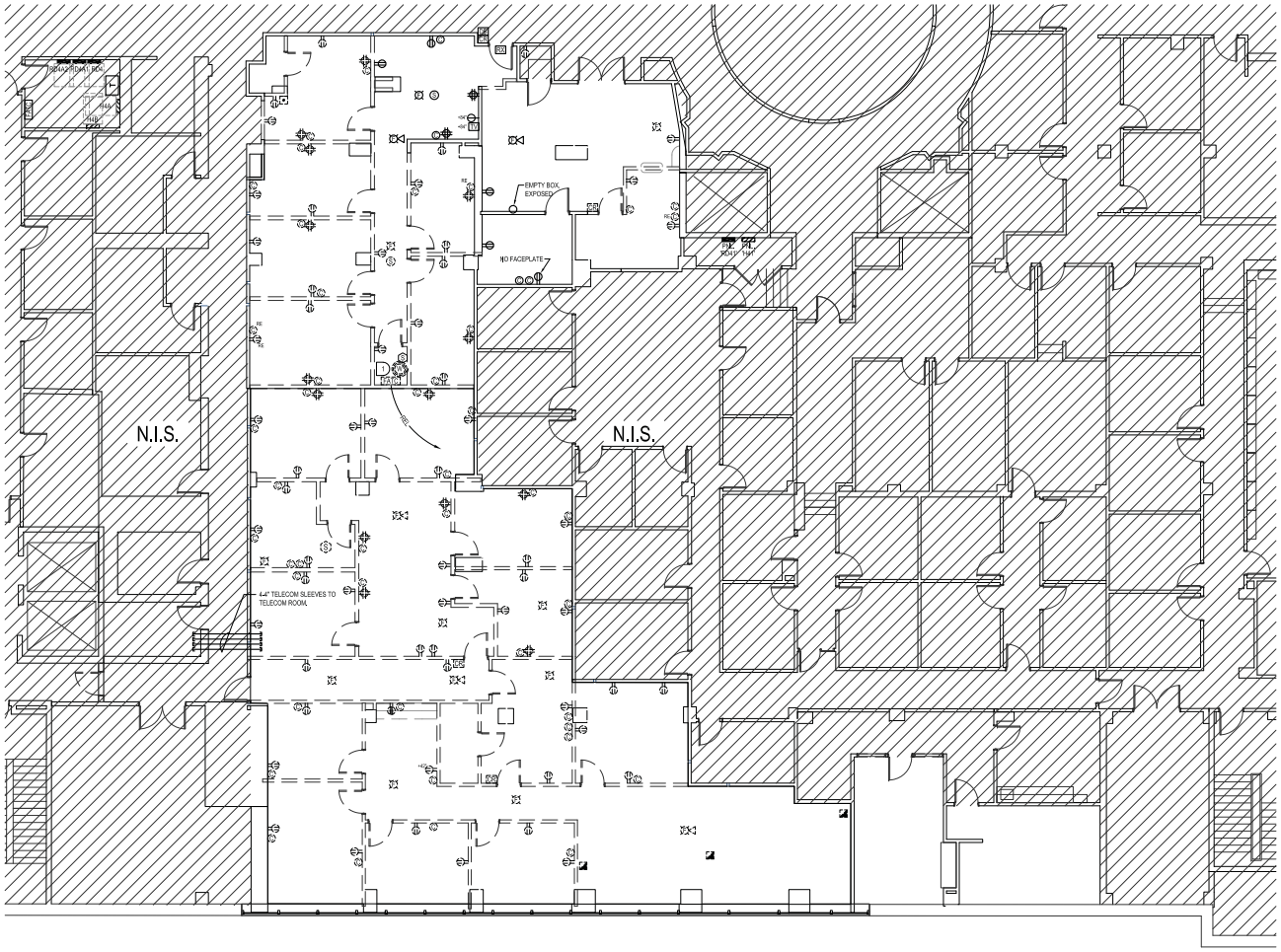

E1 PARTIAL FOURTH FLOOR PLAN - POWER DEMOLITION
SCALE: 1/8" = 1'-0"

N

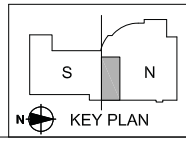

DODSTONE ARCHITECTS
3011-1 Powell Road | Tallahassee, FL 32308
850.222.0222 | www.dodstone.com

This item has been electronically signed and sealed by Peter C. Lindstrom, P.E. on 10/23/2018 using a Digital Signature.
Printed copies of this document are not considered signed and sealed, and the signature must be verified on any electronic copies.

ICE ENGINEERING
114 EAST 5th AVENUE
TALLAHASSEE, FL 32303
PHONE 850.224.7222
www.ICEengineering.com
ICE PROJECT No. 16-29

THE DOCUMENT IS THE PROPERTY OF ICE Engineering AND IS PREPARED AS AN INSTRUMENT OF SERVICE. ITS USE, REUSE OR REPRODUCTION, EXCEPT BY WRITTEN AGREEMENT WITH ICE ENGINEERING, INC., IS PROHIBITED.

Florida Certificate of Authorization #2485
Peter C. Lindstrom, P.E. #47598

OFFICE OF THE STATE ATTORNEY,
SECOND JUDICIAL CIRCUIT
4th Floor Renovation,
Suite 443
301 S. MONROE ST.
TALLAHASSEE, FL 32301
PROJECT NUMBER: 18207
SOPA PROJECT #4

AS INSTRUMENTS OF SERVICE, THESE DRAWINGS AND THE DESIGNS INCORPORATED HEREIN, AS THE PROPERTY OF THE DODSTONE GROUP ARCHITECTS, ARE TO BE RECEIVED, PROTECTED BY STATE AND FEDERAL COPYRIGHT LAWS. REPRODUCTION OR USE OF THESE DRAWINGS OTHER THAN FOR THE PROJECT IN WHICH THEY WITHOUT WRITTEN CONSENT FROM THE DODSTONE GROUP ARCHITECTS IS PROHIBITED.

DATE	SUBMISSION TITLE
06/15/2018	MEASURED DRAWINGS
09/17/2018	95% CONSTRUCTION DOCUMENTS
10/04/2018	100% CONTRACT DOCUMENTS

DATE	REVISION TITLE

DRAWN BY: GRU CHECKED BY: PCL

PARTIAL FOURTH FLOOR PLAN - POWER DEMOLITION

E201

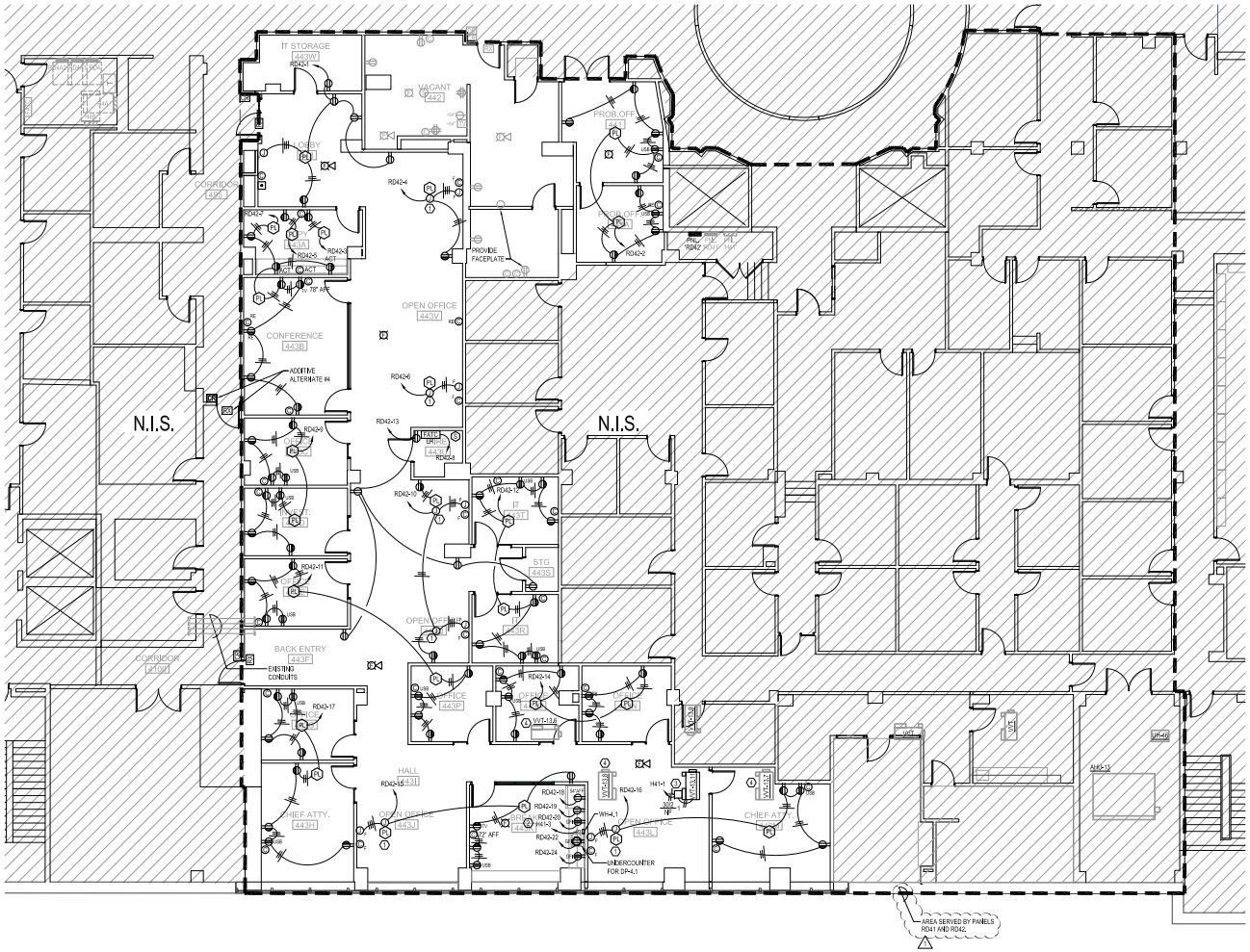

GENERAL NOTES - RENOVATION

1. EXISTING DEVICES ARE SHOWN SHADED. ALL OTHER DEVICES ARE NEW.
2. EXISTING FLOOR LEVEL OF PROJECT AREA IS NOT UNIFORM. MUCH OF THE PROJECT AREA WILL HAVE FLOOR LEVEL RAISED APPROXIMATELY 18". REFER TO ARCHITECTURAL SHEET A102 FOR AREA. NEW DEVICE ELEVATIONS SHALL BE TAKEN FROM NEW FLOOR HEIGHT. EXISTING OUTLETS ALONG EASTERN EXTERIOR WALL COULD NOT BE CONFIRMED. IF EXISTING OUTLETS ARE FOUND HERE, NOTIFY ENGINEER IMMEDIATELY.

KEY NOTES - RENOVATION

1. PRE-WIRED FURNITURE IS WIRED FOR A, B, AND C CIRCUITS WITH SEPERATE NEUTRALS. WHERE A CIRCUIT HOMERUN IS SHOWN WIRE A & C TOGETHER AND ROUTE THROUGH PLUG CONTROLLER. CONNECT TO B WIRE IN JUNCTION BOX. CIRCUIT TO FURNITURE THROUGH WALL AS SHOWN.
2. 2 #12, #12 G, IN 1/2 "C. PROVIDE 20A, 1P BREAKER IN EXISTING SPACE. UPDATE PANEL SCHEDULE.
3. 2 #12, #12 G, IN 1/2 "C. PROVIDE 30A, 1P BREAKER IN EXISTING SPACE. UPDATE PANEL SCHEDULE.
4. EXISTING VVT BOX SHOWN IN RE-LOCATED POSITION. EXTEND POWER TO NEW LOCATION. REFER TO MECHANICAL PLANS.

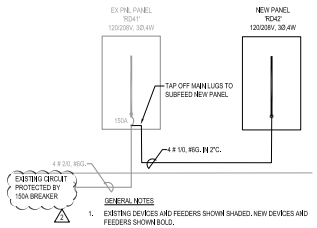

GENERAL NOTES

1. EXISTING DEVICES AND FEEDERS SHOWN SHADED. NEW DEVICES AND FEEDERS SHOWN BOLD.
2. PROVIDE ARC FLASH WARNING LABELS ON NEW ELECTRICAL EQUIPMENT DESIGNATED IN NEC 2014 110.16. CONTACT ENGINEER FOR ELECTRONIC COPY OF LABELS.

PARTIAL POWER RISER DIAGRAM

NO SCALE

EXISTING PANEL RD41 LOAD CALCULATION:

PER NEC 220.14 (K) RECEPTACLE LOAD FOR OFFICES SHALL BE CALCULATED AT 1.0 VA / SF.

13,670 SF x 1.0 VA / SF = 13,670 VA
4 - 20A LIGHTING CIRCUITS x 1,500 VA = 6,000 VA.

TOTAL = 19,670 VA = 55 A @ 208 V, 3Ø.

E1 **PARTIAL FOURTH FLOOR PLAN - POWER RENOVATION**

SCALE: 1/8" = 1'-0"

N

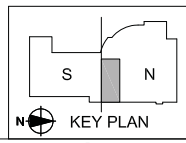

DODSTONE ARCHITECTS
3011-1 Powell Road | Tallahassee, FL 32308
850.893.0002 | www.dodstone.com

114 EAST 5th AVENUE
TALLAHASSEE, FL 32303
PHONE 850.224.7022
www.h2Ofloridaeng.com

H2O ENGINEERING

H2E PROJECT No. 16-29

THIS DOCUMENT IS THE PROPERTY OF H2Oengineering AND IS PREPARED AS AN INSTRUMENT OF SERVICE. ITS USE, REUSE OR REPRODUCTION, EXCEPT BY WRITTEN AGREEMENT WITH H2OENGINEERING, INC., IS PROHIBITED.

Florida Certificate of Authorization #2485
Peter C. Lindstrom, P.E. #67599

OFFICE OF THE STATE ATTORNEY,
SECOND JUDICIAL CIRCUIT
4th Floor Renovation,
Suite 443
301 S. MONROE ST.
TALLAHASSEE, FL 32301
PROJECT NUMBER: 16207
NEW PARKING LAW

DATE	SUBMISSION TITLE
08/15/2018	MEASURED DRAWINGS
08/17/2018	85% CONSTRUCTION DOCUMENTS
11/08/2018	100% CONSTRUCTION DOCUMENTS

DATE	REVISION TITLE
01/25/2019	ASI #01
02/12/2019	ASI #02

AS INSTRUMENTS OF SERVICE, THESE DRAWINGS AND THE DESIGN CONTAINED HEREIN ARE THE PROPERTY OF THE DODSTONE GROUP ARCHITECTS AND ARE COPYRIGHT PROTECTED BY STATE AND FEDERAL LAW. THESE DOCUMENTS REPRODUCTION OR USE OF THESE DRAWINGS OTHER THAN FOR THE PURPOSE INTENDED WITHOUT WRITTEN CONSENT OF THE DODSTONE GROUP ARCHITECTS IS PROHIBITED.

DRAWN BY: GRH CHECKED BY: PCL

PARTIAL FOURTH FLOOR PLAN - POWER RENOVATION

E202

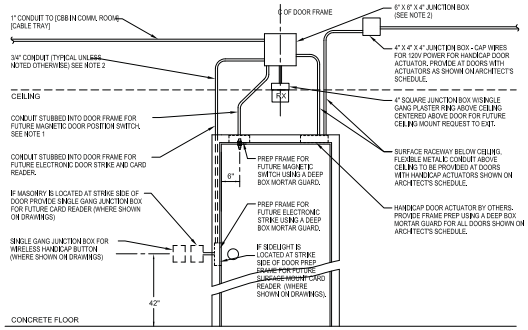

NOTES:

1.) DETAIL REPRESENTS TYPICAL CONDUIT REQUIREMENTS. SEE THE FLOOR PLANS AND SCHEDULES FOR EXACT DEVICE LOCATIONS.
2.) ALL CONDUIT SHOWN IN THESE DETAILS SHALL BE EMT, UNLESS NOTED OTHERWISE.
3.) POSITION JUNCTION BOXES OVER ACCESSIBLE CEILING.

C SINGLE DOOR SECURITY DEVICE ROUGH-IN DETAIL

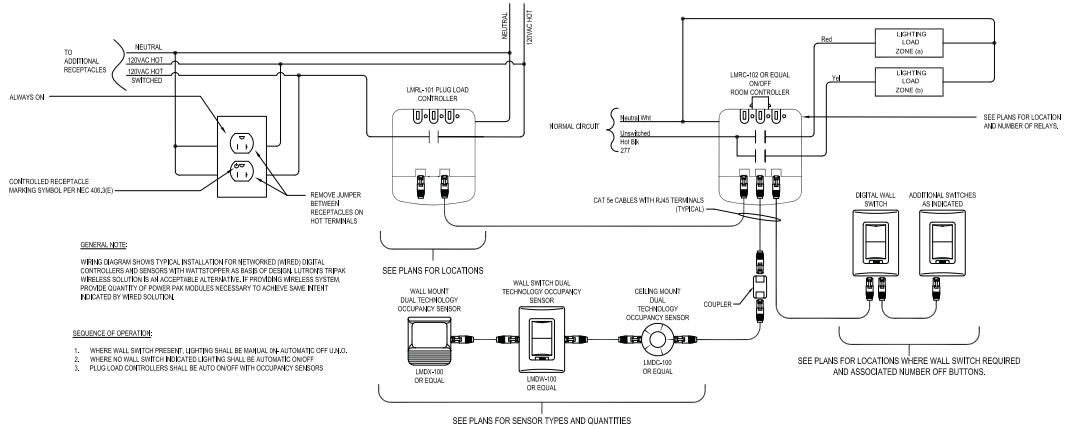

GENERAL NOTE:

WIRING DIAGRAM SHOWS TYPICAL INSTALLATION FOR NETWORKED (WIRED) DIGITAL CONTROLLERS AND SENSORS WITH WATTSTOPPER AS BASIS OF DESIGN. LUTRONS TRIPAK WIRELESS SOLUTION IS AN ACCEPTABLE ALTERNATIVE. IF PROVIDING WIRELESS SYSTEM, PROVIDE QUANTITY OF POWER PAK MODULES NECESSARY TO ACHIEVE SAME INTENT INDICATED BY WIRED SOLUTION.

SEQUENCE OF OPERATION:

1. WHERE WALL SWITCH PRESENT, LIGHTING SHALL BE MANUAL ON- AUTOMATIC OFF U.N.O.
2. WHERE NO WALL SWITCH INDICATED LIGHTING SHALL BE AUTOMATIC ON/OFF
3. PLUG LOAD CONTROLLERS SHALL BE AUTO ON/OFF WITH OCCUPANCY SENSORS

A ROOM ON/OFF CONTROLLER W/ PLUG LOAD CONTROLLER

PANEL "RD42" SCHEDULE

225A, 120/208V, 3Ø, 4W
MLO
IER = 10,000 AIC RMS SYM.
SURFACE MOUNT
NEMA 1

CKT.	SERVING	CONN. LOAD (KVA)	CON-DUIT SIZE	WIRE SIZE	CIRCUIT BREAKER TRIP AMPS	CIRCUIT BREAKER POLE	PHASE A B C	CIRCUIT BREAKER POLE	CIRCUIT BREAKER TRIP AMPS	WIRE SIZE	CON-DUIT SIZE	CONN. LOAD (KVA)	SERVING	CKT.
1	Rec. Rm. 443W, 443	1.26	1/2"	12	20	1		1	20	12	1/2"	1.62	Rec. Rm. 441A, 441	2
3	Rec. Rm. 443A Copier	0.80										0.80	Furniture, Rec. Rm. 443V	4
5	Rec. Rm. 443A Copier	0.80										1.08	Furniture, Rec. Rm. 443V	6
7	Rec. Rm. 443A, 443B	1.26										0.90	Fire Alarm, Rec. Rm. 443U	8
9	Rec. Rm. 443C, 443D	1.44										1.08	Furniture, Rec. Rm. 443Q	10
11	Rec. Rm. 443E, 443F	1.44										1.44	Rec. Rm. 443T, 443R	12
13	Rec. Rm. 443J, 443G, 443S, 443F	0.90										1.44	Rec. Rm. 443O, 443H	14
15	Furniture, Rec. Rm. 443J, 443K, 443I	1.08										1.26	Furniture, Rec. Rm. 443L, 443M	16
17	Rec. Rm. 443G, 443H	1.44										0.50	Rec. Rm. 443K Refrigerator	18
19	Rec. Rm. 443K Ice Maker	0.36										1.20	Rec. Rm. 443K	20
21	SPARE											0.90	Rec. Rm. 443K Drain Pump	22
23												1.20	Rec. Rm. 443K	24
25													SPACE	26
27														28
29														30
31														32
33														34
35														36
37														38
39	SPACE													40
41														42

CONNECTED LOAD = 24.3 KVA
LOAD CALCULATION PER NEC 220.44:
10 KVA @ 100% = 10 KVA
14.3 KVA @ 50% = 7.15 KVA
DEMAND LOAD = 17.15 KVA = 46A @ 208V, 3Ø

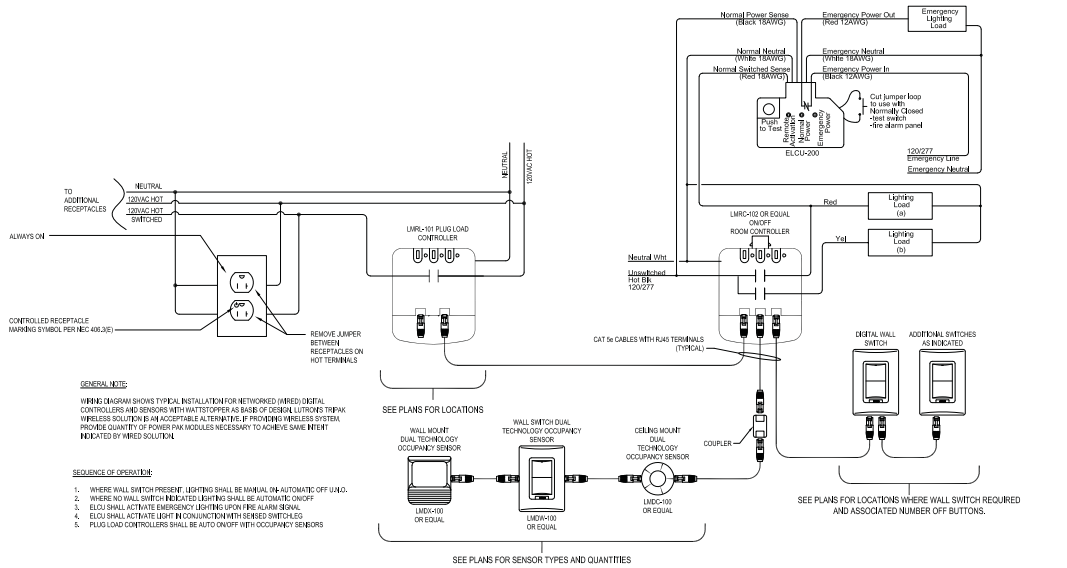

GENERAL NOTE:

WIRING DIAGRAM SHOWS TYPICAL INSTALLATION FOR NETWORKED (WIRED) DIGITAL CONTROLLERS AND SENSORS WITH WATTSTOPPER AS BASIS OF DESIGN. LUTRONS TRIPAK WIRELESS SOLUTION IS AN ACCEPTABLE ALTERNATIVE. IF PROVIDING WIRELESS SYSTEM, PROVIDE QUANTITY OF POWER PAK MODULES NECESSARY TO ACHIEVE SAME INTENT INDICATED BY WIRED SOLUTION.

SEQUENCE OF OPERATION:

1. WHERE WALL SWITCH PRESENT, LIGHTING SHALL BE MANUAL ON- AUTOMATIC OFF U.N.O.
2. WHERE NO WALL SWITCH INDICATED LIGHTING SHALL BE AUTOMATIC ON/OFF
3. ELCU SHALL ACTIVATE EMERGENCY LIGHTING UPON FIRE ALARM SIGNAL
4. ELCU SHALL ACTIVATE LIGHT IN CONJUNCTION WITH SENSED SWITCH LEG
5. PLUG LOAD CONTROLLERS SHALL BE AUTO ON/OFF WITH OCCUPANCY SENSORS

B ROOM ON/OFF CONTROLLER W/ PLUG LOAD CONTROLLER AND EMERGENCY LIGHTING CONTROLLER

DODSTONE ARCHITECTS
3011-1 Powell Road | Tallahassee, FL 32308
dodstonearch.com | 8502878335

This item has been electronically signed and sealed by Peter C. Lindstrom, P.E. on 10/30/2018 using a Digital Signature.

Printed copies of this document are not considered signed and sealed and the signature must be verified on any electronic copies.

114 EAST 5th AVENUE
TALLAHASSEE, FL 32303
PHONE 850.224.7922
www.2020engineering.com

KCE PROJECT No. 18-28

THE DOCUMENT IS THE PROPERTY OF 2020 engineering AND IS PREPARED AS AN INSTRUMENT OF SERVICE. ITS USE, REUSE OR REPRODUCTION, EXCEPT BY WRITTEN AGREEMENT WITH 2020 ENGINEERING, INC., IS PROHIBITED.

Florida Certificate of Authorization #2485
Peter C. Lindstrom, P.E. #47598

OFFICE OF THE STATE ATTORNEY,
SECOND JUDICIAL CIRCUIT
4th Floor Renovation,
Suite 443
301 S. MONROE ST.
TALLAHASSEE, FL 32301
PROJECT NUMBER: 18207
REPORT DATE: 10-30-18

DATE	SUBMISSION TITLE
06/15/2018	MEASURED DRAWINGS
08/17/2018	65% CONSTRUCTION DOCUMENTS
10/04/2018	100% CONSTR. DOCUMENTS

DATE	REVISION TITLE

AS INSTRUMENTS OF SERVICE, THESE DRAWINGS AND THE DESIGN THEREIN REMAIN THE PROPERTY OF THE DODSTONE GROUP ARCHITECTS. THESE DESIGNS ARE PROTECTED BY STATE AND FEDERAL COPYRIGHT LAWS. REPRODUCTION OR USE OF THESE DRAWINGS OTHER THAN FOR THE PURPOSE INTENDED WILL BE WITHOUT WRITTEN CONSENT OF THE DODSTONE GROUP ARCHITECTS IS PROHIBITED.

DRAWN BY: PCL
REVIEWED BY: PCL

DETAILS & PANEL SCHEDULES

E301

Attachment C