May 2013

To: Leon County Commissioners
From: Vision 2020, LLC

Since its inception in 2007, Vision 2020 has provided expertise and start-up support to local entrepreneurial efforts and technology transfer projects. The initial investment from Leon County for administration and the corresponding venture capital investment from the Vision Fund are creating jobs and establishing the region's reputation for innovation.

Leon County's initial investment of $810,704 was intended to jump-start Vision 2020, helping it overcome the impassible hurdles of a start-up private equity fund in a market as small as north Florida. Future financial successes of companies involved with Vision 2020 would be used to maintain momentum and reinvest in the initiative.

In 2013 and 2014, those invested portfolio companies are maturing in such a way as to demonstrate their viability to potential customers and follow-on investors.

As its name infers, Vision 2020 should be a mature, self supporting private equity fund that perpetually funds new business opportunities. Vision 2020 will be a key resource for entrepreneurs, inventors and emerging businesses in our area that need both capital and expertise to grow their business.

While many interested parties have approached the Vision Fund for investment, few pass the vetting process of the Vision Fund management, investors, and related subject matter experts. The following report to the Leon County Commission from Vision 2020 provides information on the six initiatives managed by Vision 2020 since 2007.

Sincerely,

Vision Tech International

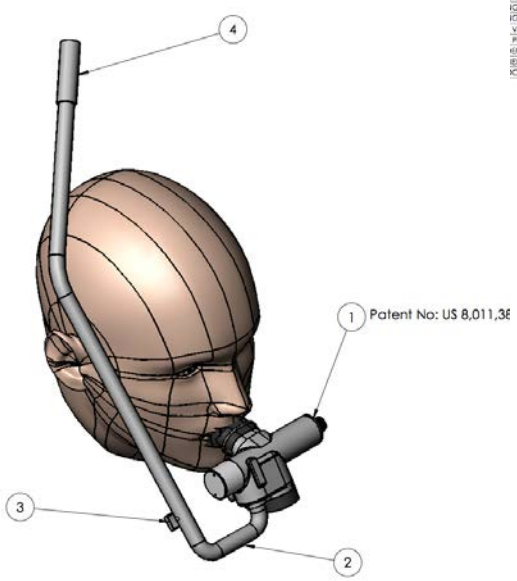

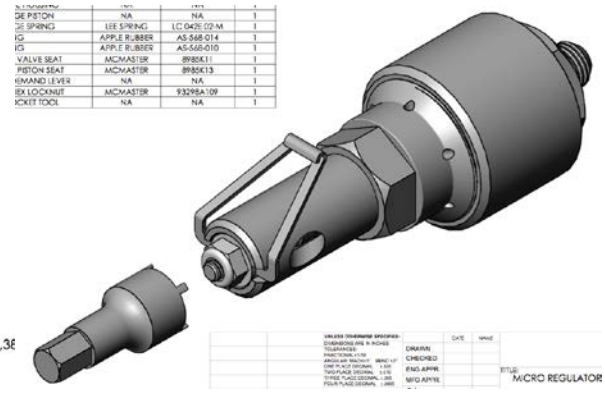

Snorkel concept (above), prototype design and manufactured (right)

Vision Tech International (VTI) designed and is constructing a revolutionary breathing apparatus for applications in three major markets including diving, search & rescue, and aviation. This device would replace the more expensive regulators in many of these applications, be easier to maintain and replace, and be far less expensive. The device was invented by Paul and Michael Califano of Cairo, Georgia and the patent was issued to VTI in September of 2011.

VTI is located in the Summit East Technology and Research Park in Tallahassee and began the micro-regulator project in 2010. The project is managed by Vision Fund investors and has no paid employees at this time. The Vision Fund has invested a total of $175,000 in this company.

Year in review

In 2012, the project focused on a redesign of the first micro-regulator prototype. The goals for the redesign were:

- Compact and lightweight design – a smaller and lighter design will be easier to use across applications and show distinct advantage over existing regulators

- Increased safety and reliability – dive testing in 2012 revealed the smart chip urethane springs warped and were unreliable under normal conditions. The new design calls for basic, metal-based, mechanical springs. Expensive and difficult electron beam welding design was changed to parts that are threaded. No welding required.
- Accessible design – in order for the regulator to be economical to own and operate it should be easy to break down and inspect or replace the internal parts.

At the close of 2012, the project was on schedule. The redesign work and prototype CAD drawings were complete and the manufacture of a prototype began.

Plans for 2013

A new version of the micro-regulator prototype is now complete and ready for testing. This prototype will be tested during the first months of 2013 and any adjustments to the design based on testing will require the manufacture of a new prototype. After a successful round of testing on a single prototype, more prototypes will be manufactured and distributed to a small group of potential buyers. Concurrently, a patent application will be submitted for the micro-regulator. If the redesign project is successful, the design of the outer housing for the regulator can begin (which is outside the scope of the current project). If there is sufficient demand, the manufacture of the regulator would begin late in 2013 or early in 2014 at a location in Tallahassee or Leon County and require 10 to 15 full time employees.

SunnyLand Solar

Manufacturing equipment

Solar sausages testing

SunnyLand Solar is constructing a solar energy collector based on a design created at Florida State University. The 'solar sausages' use a clear Mylar cylinder with a reflective Mylar center sheet to collect and direct sunlight to a receiver. The heat collected from the sausages produces steam which eventually drives a turbine generator. This technology can produce more energy with much lower costs than traditional photovoltaic based solar arrays.

The Vision Fund purchased the license from the Florida State University Research Foundation in 2009 for $10,000. SunnyLand Solar purchased the right to manufacture and market the technology from the Vision Fund in 2010 for $220,000. The Vision Fund has recouped all of the initial investment and has helped raise $10 million for this project. SunnyLand Solar manages operations and manufactures the solar sausages in Tallahassee at 2830 Plant Street. The testing array is located on Captain Brown Road in Madison.

Year in review

During 2012, the design, manufacture, and testing continued for the two parts of this system: the Mylar sausages and the heat sink. SunnyLand Solar oversaw the production of over one thousand Mylar sausages for testing. These hand-crafted versions are approximately 5 feet in diameter, making them the largest prototypes to date. Some of the assembled sausages were used in a small testing operation in Tallahassee and a larger number were installed in the testing array in Madison, Florida. Later in 2012, successful testing led to the design and development of machinery to manufacture the Mylar sausages. Manufacturing equipment (pictured above) arrived in Tallahassee in January 2013 and is being assembled.

Solar Sink, also in Tallahassee, managed the receiver part of the design which includes the solar module and heat sink. A working prototype of the heat sink was complete in December of 2012.

Plans for 2013

Previous versions of the Mylar sausages were made by hand and workers could produce 5 a day on average. The new production equipment can produce approximately one complete Mylar sausage in one minute. This mechanization will help tremendously to speed the testing process and prepare for mass production. This equipment is expected to be up and running in early 2013.

The Mylar sausages and the receiver components will be joined for further testing during 2013. SunnyLand expects to have a complete system ready for operation in the third quarter of 2013.

The testing array at Madison location will continue to collect data on the performance of the solar sausages through 2014. SunnyLand Solar has agreements with the City of Tallahassee and Tri-County Electric (a subsidiary of Seminole Electric Cooperative) to supply power to the grid at this and any future location in Tallahassee.

Employment projections are holding steady: 10 current employees and 30 employees expected when SunnyLand Solar is fully operational. When testing is complete and a product is marketable, the company should generate about $12 million a year.

Southern Fidelity Property & Casualty

Southern Fidelity Property and Casualty (SFPC) and the partner company Southern Fidelity Risk Managers were established in cooperation with the Vision Fund and several other investors to assume insurance policies from the Citizens Property Insurance Corporation (Citizens). By establishing SFPC, the parent company Southern Fidelity Insurance became one of many private sector companies involved in the depopulation or takeout program that returns Citizens policies to the private market. Southern Fidelity received a Certificate of Authority from the Florida Office of Insurance Regulation (OIR) in January of 2012. Vision Fund contributed a small investment of $101,685 to the $20 million total investment for the establishment of SFPC. The office of SFPC is located in Tallahassee at 2255 Killearn Center Boulevard.

Year in review

SFPC was approved for three policy assumptions or 'take-outs' during 2012 by OIR. SFPC assumed approximately 60,000 policies which is the maximum. During 2012, SFPC added approximately 40 new, full-time positions to manage the new policies. These jobs are expected to continue over the long term. SFPC's total revenue for 2012 was $34.7 million with a net profit of $279,000.

Plans for 2013

There are no immediate plans to assume more policies from Citizens.

Verdicorp, Inc.

A test ORC system (above) and turbo expander (right).

Verdicorp is a manufacturer of energy efficient devices and renewable energy products headquartered in Tallahassee, Florida and established by Ron Conry. Conry's invention of a lightweight, oil-free compressor led to the joint venture between the Danish company Danfoss and Conry's company Turbocor in 2004. The success of the compressor (over 30,000 units in 40 countries) design led Conry to establish his own, independent venture in 2009 with Verdicorp. The company's two main products to date are a turbo expander that is used in Organic Rankine Cycle (ORC) systems and a self-contained Renewable Energy Power Plant (REPP) based on the same ORC concept.

ORC systems are designed to capture low-grade waste heat from any applicable source (solar thermal, geothermal, biomass, or waste industrial heat) and convert the heat into marketable electricity. The turbo expander can be used in many existing ORC systems and the REPP is a standalone ORC system with the turbo expander built-in. A REPP designed for geothermal applications was delivered to

Queensland Geothermal Energy Centre of Excellence and installed in 2012. The Vision Fund contributed $204,000 combined with a total investment of $2.6 million in Verdicorp by mostly local investors. Verdicorps's main office is located at 4030 North Monroe Street.

Year in Review

Verdicorp used 2012 to reorganize its company and change focus. Relationships between Verdicorp and various companies in Europe were reevaluated after learning that supplying original equipment manufacturers (OEM) with turbo expanders was not going to be as successful or as profitable. The company and Vision Fund investors decided to market and manufacture complete ORC systems instead and broaden their marketing strategy. Later in 2012, the company increased marketing and proposals throughout southeast Asia, North America, and western Europe in industries like shipping, and power generation.

Plans for 2013

By July 2013, the Tallahassee site will have completed a working prototype of a ORC system designed around the turbo expander. Verdicorp currently has proposals worth $750 million distributed to various companies for various applications. Many of these proposals are for companies operating in shipping, mining, manufacturing, and public utilities. The large increase in the global solar thermal market and the inherent waste heat generated is another positive opportunity for the ORC system and Verdicorp. Currently, Verdicorp employs 10 people and employment should increase to 40 to meet the expected increase in demand.

NanoVision

NanoVision and Florida State University's High Performance Materials Institute (HPMI) formed an official joint development agreement in October of 2011 to design and build a risk reduction prototype manufacturing machine for an eight inch wide mat of randomly oriented carbon nanotubes, a.k.a. "Buckypaper." This machine would enable NanoVision to distribute samples of Buckypaper to various companies for testing in various applications.

Aggregates of carbon nanotubes (like Buckypaper) are one tenth the weight of steel and 500 times stronger. The material has good heat dispersion properties and is an efficient conductor of electricity. Different markets exist for different versions of Buckypaper. An unaligned version of Buckypaper would be more suited for electromagnetic shielding applications (aerospace) and an aligned version works best for conductivity (personal computers).

NanoVision was created by Vision Fund investors and management to continue the efforts of Sunshine Nanotech.[1] Per the 2011 agreement, NanoVision and HPMI partnership developed a seven step, low risk, milestone-based plan to complete the necessary tasks. The milestones are:

1. Complete a preliminary concept design study
2. Order long lead time components
3. Hold a design review
4. Assemble a risk reduction machine prototype
5. Demonstrate machine at vendor site
6. Install and demonstrate machine at HPMI
7. Complete training and accept the machine

The Vision Fund invested $200,000 in NanoVision LLC. Other individual investors provided $380,000 to fund additional milestones. NanoVision is currently located in the Summit East Technology and Research Park in Tallahassee. The project is managed by both Vision Fund investors and staff from HPMI. NanoVision has two contracted employees at this time.

Year in Review

Three of the seven milestones were completed in 2012. The fourth milestone (construction of the prototype machine) is underway. NanoVision did receive a CAD model of the machine in the event NanoVision would select another engineering firm. During the year, NanoVision also established a relationship with Florida Institute for the Commercialization of Public Research's Phil Hipol to assist in project management and fine tune the business plan.

1 View Attachment #1 at http://www.leoncountyfl.gov/agendas/view.asp?item_no='16'&meeting_date=3/23/2010

Plans for 2013

The construction of the prototype machine (Milestone 4) should be complete by the summer of 2013. NanoVision is engaging representatives from companies and sectors interested in several applications of Buckypaper; namely in the aerospace, defense, and biomedical industries. When a machine is complete, FSU's HPMI existing staff will manage initial operation and NanoVision should support 10 employees.

Centurion Tactical

In 2010, the Vision Fund established a profit sharing agreement with Centurion Tactical, a weapons manufacturer located in Tallahassee. The company had developed a more reliable line of weapons for use by police officers. Vision Fund's initial investment of $3,780 was recouped by early 2011, with a small profit of $1,191. After further analysis, the management and investors of the Vision Fund decided the relationship was high risk and would not provide enough return. The Vision Fund ended the relationship later in 2011.